Table of contents ..... page

EC Declaration of conformity 2
Electricity Measuring Protocol.....3
Care and maintenance instructions 4
Starter.....8
Wiring scheme 9
Planetary gear and part list 10
Motor and part list 11
Oil type, quantity and oil change interval 12

Appendix

Exploded view drawing and part list

Rojo Machines Finland contact information:

Attila Alastalo, Sales Manager
GSM: +358 400 903 860
e-mail: attila.alastalo@rojomachines.com

Jari Heikkonen, Sales
GSM: +358 50 439 7050
e-mail: jari.heikkonen@rojomachines.com

Osoite/Address:
Hovinsaari, Puolanlaituri
FI-48200 KOTKA
FINLAND

Puhelin/Phone/Internet:
Nat (10) 420 4050
Int +358 10 420 4050
www.rojomachines.com
info@rojomachines.com

Fax:
Nat (05) 2269 050
Int + 358 5 2269 050

Pankki/Bank:
Pohjola Bank
Swift: OKOYFIHH

Account No:
FI9051720220067756

EC Declaration of conformity

Manufacturer: Rojo Machines Finland
Hovinsaari, Puolanlaituri
FI-48200 KOTKA
Finland

Representative:

Machinery description: **ROJO 80LC,** serial No.

Used harmonised standards: EN 292 - 1, -2; EN ISO 12100

The machinery stated above is herewith declared to be in conformity with the essential requirements in the Machinery Directive 2006/42/EC with amendments.

Kotka . .2014

ROJO MACHINES FINLAND

_____

Osoite/Address: Hovinsaari, Puolanlaituri FI-48200 KOTKA FINLAND
Puhelin/Phone/Internet: Nat (10) 420 4050 Int +358 10 420 4050 www.rojomachines.com info@rojomachines.com
Fax: Nat (05) 2269 050 Int + 358 5 2269 050
Pankki/Bank: Pohjola Bank Swift: OKOYFIHH
Account No: **FI9051720220067756**

Electricity Measuring Protocol

Valmistaja:
Manufacturer:

ROJO MACHINES FINLAND
Hovinsaari, Puolanlaituri
FI-48200 KOTKA
Finland
tel. +358 10 420 4050
fax +358 5 2269 050
email: info@rojomachines.com

Rojomalli/ Mixer model: 80LC **Sarjanro/Serial No:**
Valmistusvuosi/ Manufacturing year:

Moottoritiedot/Motor specifications:

Tyyppi Model	TN100B4 3,0/1500 B5 2/4 IE2	Sarjanro Serial No				
im:		kW:	3 kW			
cosφ:						
50 Hz:	V:	Δ	V:	Y	r/min	
	A:		A:			
60 Hz:	V:	Δ	V:	Y	r/min	
	A:		A:			
Ma:		Kg:				
i:		:1				

Mittaustulokset/ measuring results:

50 Hz
400 V

Vaihe:	L1….A	L2….A	L3….A
Amp:			

/ /20

ROJO MACHINES FINLAND

Osoite/Address:
Hovinsaari, Puolanlaituri
FI-48200 KOTKA
FINLAND

Puhelin/Phone/Internet:
Nat (10) 420 4050
Int +358 10 420 4050
www.rojomachines.com
info@rojomachines.com

Fax:
Nat (05) 2269 050
Int + 358 5 2269 050

Pankki/Bank:
Pohjola Bank
Swift: OKOYFIHH

Account No:
FI9051720220067756

Care and maintenance instructions

1) DRIVE

The mixer is equipped with a planetary gear motor. Oil type, quantity and oil change interval is presented in this guide on page 12.

The motor starter is equipped with start/stop buttons, emergency stop, limit switch and connector with phase inverter. **Power supply: 400 V, 3P+N+E, 50 Hz.**

2) SPARE PARTS

Rojo Machines Finland and our representatives sell spare parts for Rojo mixers.

The manufacturer is not liable for any damage and breakdowns caused by using other than manufacturer's own machinery parts and spare parts.

3) ARMS AND PADDLES

Check the positions of the paddles once a week. Set the adjusting screws on the paddle bridge so that the paddles are close to the bottom and sides but without coming into contact with them. Lock the settings and turn the arms by hand to make sure that the paddles are clear of the bottom and sides all the way round. Re-adjust if necessary. Fit new arms and paddles when needed.

4) MIXER DRUM

Clean the mixer daily. The clean mixer will give the best mixing result and a longer working life. Use the grease nipples to lubricate the sector cover shaft bearings once a week. **Do NOT restart the mixer with the drum full of already mixed heavy material**. For example in case of a power outage the drum has to empty by hand..

Don't charge the mixer with bigger batches than that for which the mixer is intended. Capacity of the ROJO 80LC: approx. 75-150 kg (35-75 liters, density of 2000-3000 kg/m^3).

Osoite/Address:
Hovinsaari, Puolanlaituri
FI-48200 KOTKA
FINLAND

Puhelin/Phone/Internet:
Nat (10) 420 4050
Int +358 10 420 4050
www.rojomachines.com
info@rojomachines.com

Fax:
Nat (05) 2269 050
Int + 358 5 2269 050

Pankki/Bank:
Pohjola Bank
Swift: OKOYFIHH

Account No:
FI9051720220067756

5) LID

To maximise personal safety, the lid is equipped with a limit switch that will trip the power supply if the lid is not fully closed. Always keep the lid closed when the mixer is in operation. Do not remove the lid until the mixer is switched off and isolated.

6) NOISE LEVEL

Level of sound at 1 m distance from the mixer is 85 dB(A).

7) HANDLING

– The lid has to be opened before the mixer is lifted.

– Never lift the mixer when the drum is full of mass.

– After the mixer is stopped do not restart the mixer when the drum is full of mixed heavy material. For example in case of a power failure the mixer must be emptied manually.

– It is important to clean the mixer to ensure that old material from the previous charge will not impair the quality of the material being mixed and to avoid breakdowns of planetary gear motor for example. Clean the mixer drum, arms and paddles very thoroughly.

– The mixer is not allowed to charge with larger amount of mass than its capacity. Overload has to be avoided. The correct current values are shown in the electricity measurement protocol.

– Before service and maintenance work, always make certain that the mixer is switched off and disconnected.

Osoite/Address:
Hovinsaari, Puolanlaituri
FI-48200 KOTKA
FINLAND

Puhelin/Phone/Internet:
Nat (10) 420 4050
Int +358 10 420 4050
www.rojomachines.com
info@rojomachines.com

Fax:
Nat (05) 2269 050
Int + 358 5 2269 050

Pankki/Bank:
Pohjola Bank
Swift: OKOYFIHH

Account No:
FI9051720220067756

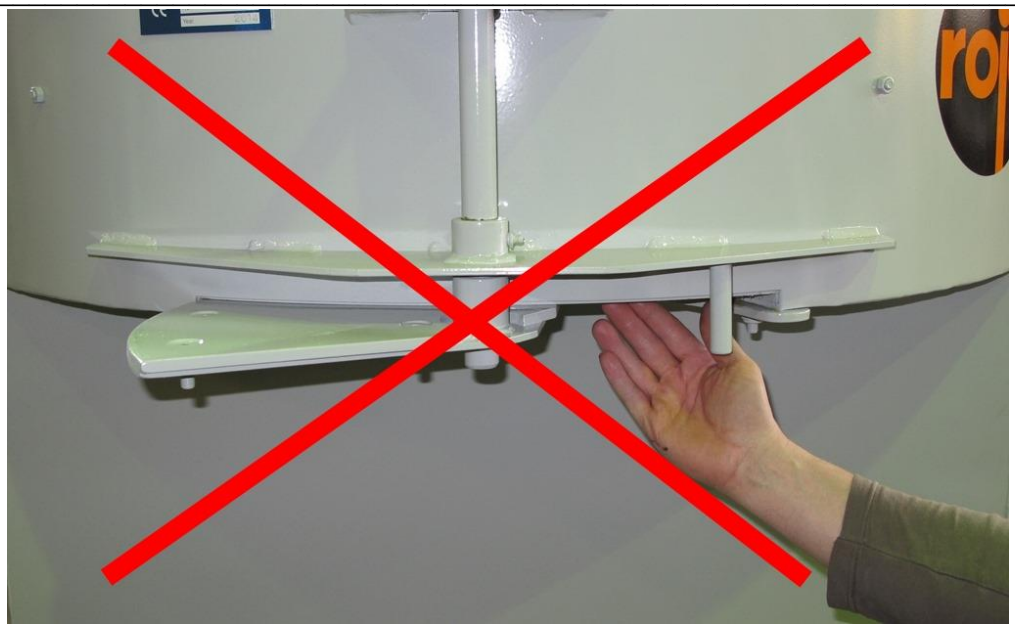

Attention! Never put your hand through sector cover hatch to the drum for avoiding severe hand injury. Clean the drum always from the top when the mixer is switched off and disconnected.

– Hand, tools or anything else is absolutely forbidden to insert into the drum while the mixer is running.

– Only personnel who are well acquainted with the handling and the use of the mixer may use it.

– When the motor is switched on, it is very important that the phase sequence is correct. The connector of the starter is equipped with a phase inverter that is used for reversing the direction of rotation. The direction of rotation should be anti-clockwise. Serious damage may occur if the mixer rotates to the wrong direction.

8) GENERAL SAFETY INFORMATION

When the mixer is in operation, some of its components move and rotate.
As a result:

- improper use
- removal of protective devices and disconnection of safety devices
- inadequate inspection and maintenance

MAY LEAD TO SERIOUS PERSONNEL INJURIES OR DAMAGE TO PROPERTY.

Osoite/Address: Hovinsaari, Puolanlaituri FI-48200 KOTKA FINLAND
Puhelin/Phone/Internet: Nat (10) 420 4050 Int +358 10 420 4050 www.rojomachines.com info@rojomachines.com
Fax: Nat (05) 2269 050 Int + 358 5 2269 050
Pankki/Bank: Pohjola Bank Swift: OKOYFIHH
Account No: **FI9051720220067756**

Those who are responsible for safety must therefore ensure that:

- The mixer is transported, installed, operated, inspected, maintained and repaired only
  - adequate training and experience
  - knowledge of general safety regulations, national and local laws and other requirements
  - the ability to recognise and avoid operations that may be dangerous

All maintenance and inspection work has to carry out only with the permission of the person responsible for safety. During previously mentioned work, mixer has to be stationary and disconnected, with the power supply isolated.

Osoite/Address:
Hovinsaari, Puolanlaituri
FI-48200 KOTKA
FINLAND

Puhelin/Phone/Internet:
Nat (10) 420 4050
Int +358 10 420 4050
www.rojomachines.com
info@rojomachines.com

Fax:
Nat (05) 2269 050
Int + 358 5 2269 050

Pankki/Bank:
Pohjola Bank
Swift: OKOYFIHH

Account No:
FI9051720220067756

Starter

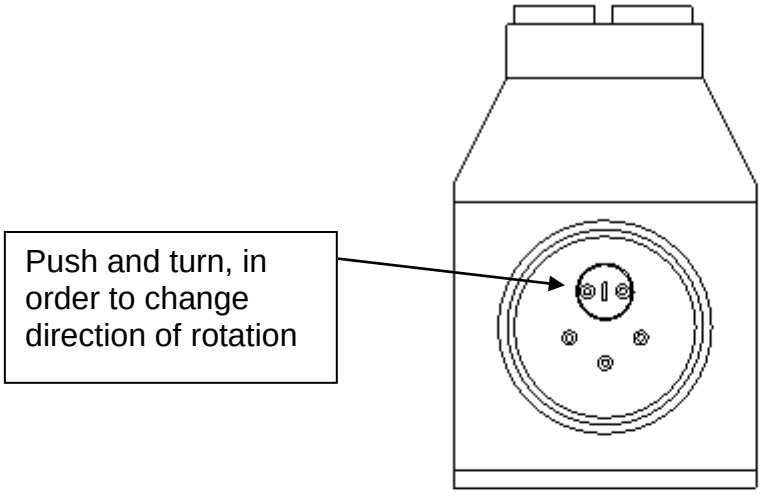

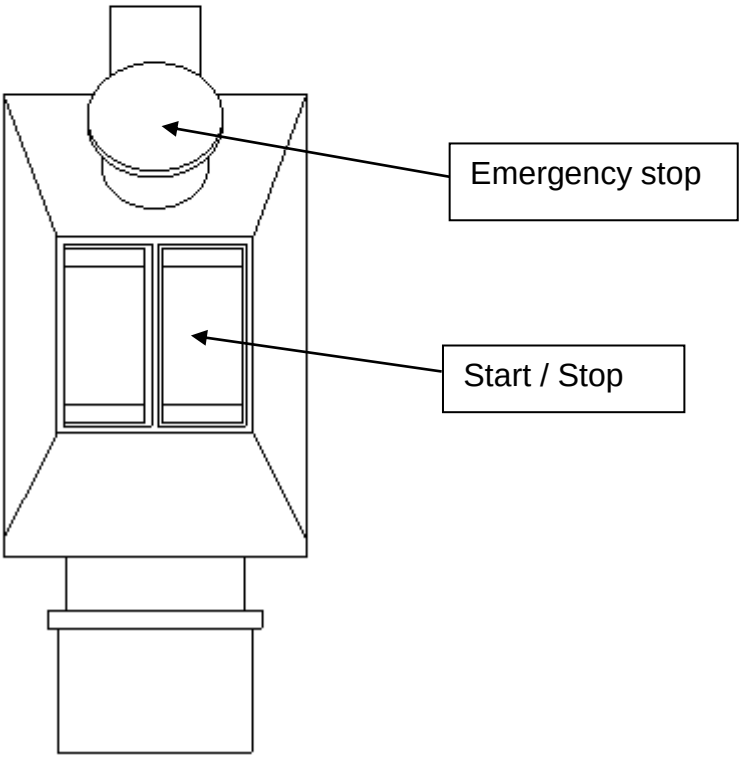

Osoite/Address:
Hovinsaari, Puolanlaituri
FI-48200 KOTKA
FINLAND

Puhelin/Phone/Internet:
Nat (10) 420 4050
Int +358 10 420 4050
www.rojomachines.com
info@rojomachines.com

Fax:
Nat (05) 2269 050
Int + 358 5 2269 050

Pankki/Bank:
Pohjola Bank
Swift: OKOYFIHH

Account No:
FI9051720220067756

Wiring scheme

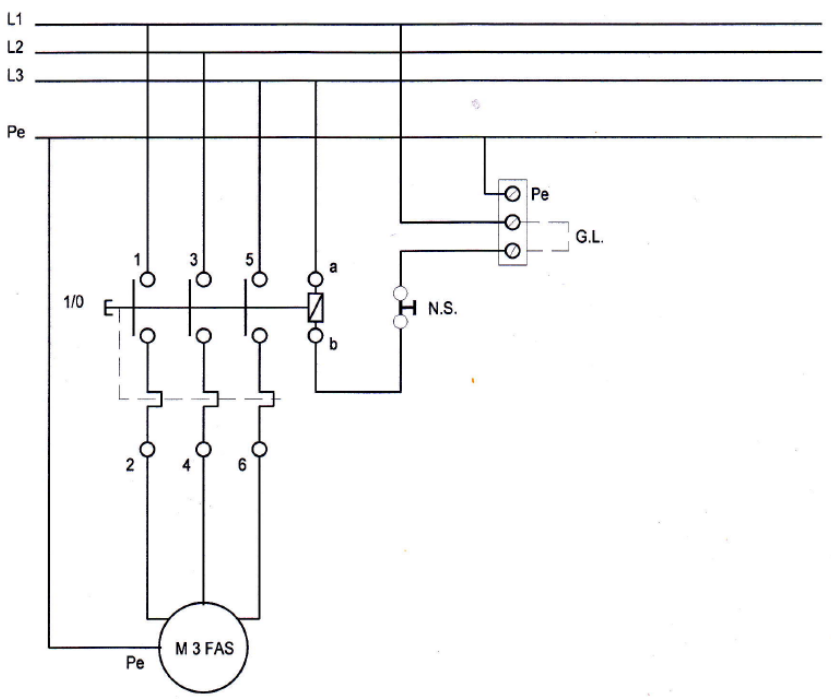

1 st Kapsling Tripus 204p76800	110923	TRIPUS EL-MEK AB		
1 st Motorskydd Tripus Ms 10 6,3-10 A				
1 st Tripus Spole Uc 400 V Ms		CEMENTBLANDARE		
1st Nödstopp zb5 as 54 + 1 st block zb5 az 102 telemek.		3 KW 400 VOLT Uc400 v		
1 m Kabel Rev 4 x 1,5 Aton 553881 1 st förskruvning m20		rit.nr. 110923-01		
1 st Kopplingslist med hållare 3 pol.	sb	ROJO	320004	

Osoite/Address:
Hovinsaari, Puolanlaituri
FI-48200 KOTKA
FINLAND

Puhelin/Phone/Internet:
Nat (10) 420 4050
Int +358 10 420 4050
www.rojomachines.com
info@rojomachines.com

Fax:
Nat (05) 2269 050
Int + 358 5 2269 050

Pankki/Bank:
Pohjola Bank
Swift: OKOYFIHH

Account No:
FI9051720220067756

Planetary gear and part list

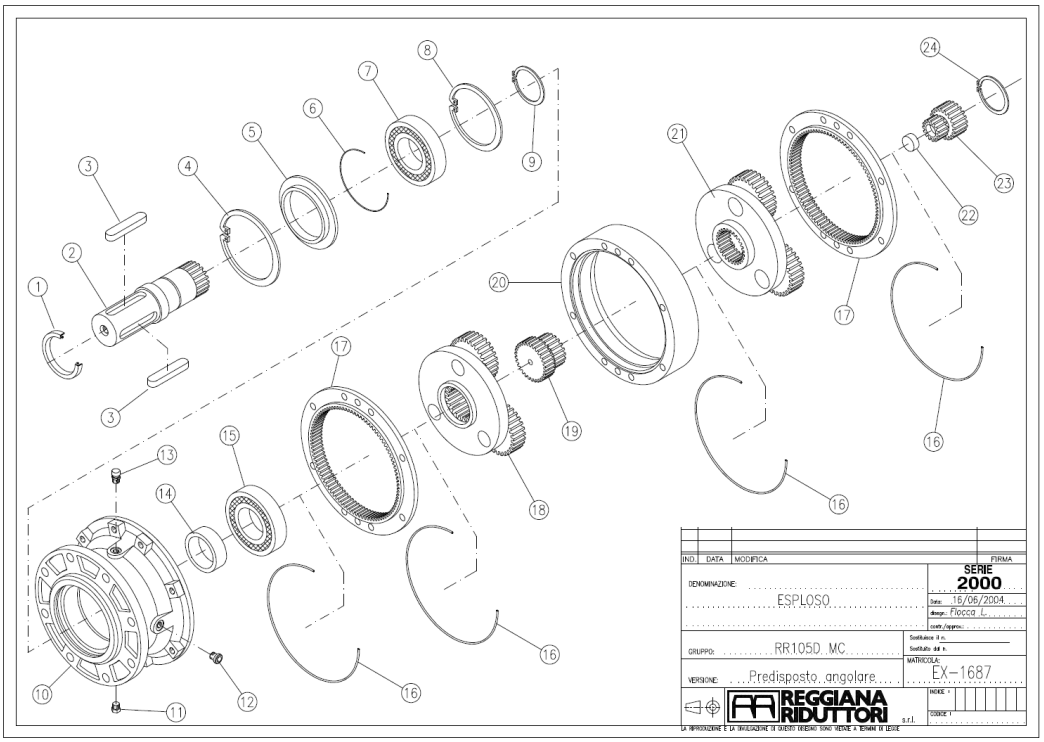

POS	CODICE CODE	DENOMINAZIONE	DESCRIPTION	quantità quantity	NOTE NOTES
1	C125014	PARAOLIO	OIL SEAL	1	
2	F030683500	ALBERO USCITA	OUTPUT SHAFT	1	
3	C070092	CHIAVETTA	KEY	2	
4	C080090	SEEGER	SEEGER	1	
5	F260914200	SUPPORTO PARAOLIO	OIL SEAL SUPPORT	1	
6	C140023	OR	O-RING	1	
7	C010016	CUSCINETTO	BEARING	1	
8	C080080	SEEGER	SEEGER	1	
9	C085040	SEEGER	SEEGER	1	
10	F260900300	SUPPORTO USCITA	OUTPUT SUPPORT	1	
11	C174001	TAPPO MAGNETICO	MAGNETIC PLUG	1	
12	C172001	TAPPO LIVELLO OLIO	OIL LEVEL PLUG	2	
13	C173001	TAPPO DI SFIATO	AIR ESCAPE PLUG	1	
14	F090542000	DISTANZIALE CUSCINETTO	BEARING SPACER	1	
15	C010016	CUSCINETTO	BEARING	1	
16	C140050	OR	O-RING	4	
17	F060103000	CORONA	PLANETARY RING	2	
18	P0040	GRUPPO RID. COMP. R=1:3,21	COMPLETE RED. R=1:3,21	1	
	P0041	GRUPPO RID. COMP. R=1:4,1	COMPLETE RED. R=1:4,1		
	P0042	GRUPPO RID. COMP. R=1:5,42	COMPLETE RED. R=1:5,42		
	P0043	GRUPPO RID. COMP. R=1:7,2	COMPLETE RED. R=1:7,2		
19	F170513500	PIGNONE R=1:3,21	PINION R=1:3,21	1	
	F170503500	PIGNONE R=1:4,1	PINION R=1:4,1		
	F170493500	PIGNONE R=1:5,42	PINION R=1:5,42		
	F170483500	PIGNONE R=1:7,2	PINION R=1:7,2		
20	F090428000	DISTANZIALE	SPACER	1	
21	P0040	GRUPPO RID. COMP. R=1:3,21	COMPLETE RED. R=1:3,21	1	
	P0041	GRUPPO RID. COMP. R=1:4,1	COMPLETE RED. R=1:4,1		
	P0042	GRUPPO RID. COMP. R=1:5,42	COMPLETE RED. R=1:5,42		
	P0043	GRUPPO RID. COMP. R=1:7,2	COMPLETE RED. R=1:7,2		
22	F200169000	PASTIGLIA DI RASAMENTO	SHIMMING	1	
23	F170513500	PIGNONE R=1:3,21	PINION R=1:3,21	1	
	F170503500	PIGNONE R=1:4,1	PINION R=1:4,1		
	F170493500	PIGNONE R=1:5,42	PINION R=1:5,42		
	F170483500	PIGNONE R=1:7,2	PINION R=1:7,2		
24	C085040	SEEGER	SEEGER	1	

Osoite/Address:
Hovinsaari, Puolanlaituri
FI-48200 KOTKA
FINLAND

Puhelin/Phone/Internet:
Nat (10) 420 4050
Int +358 10 420 4050
www.rojomachines.com
info@rojomachines.com

Fax:
Nat (05) 2269 050
Int + 358 5 2269 050

Pankki/Bank:
Pohjola Bank
Swift: OKOYFIHH

Account No:
FI9051720220067756

Motor and part list

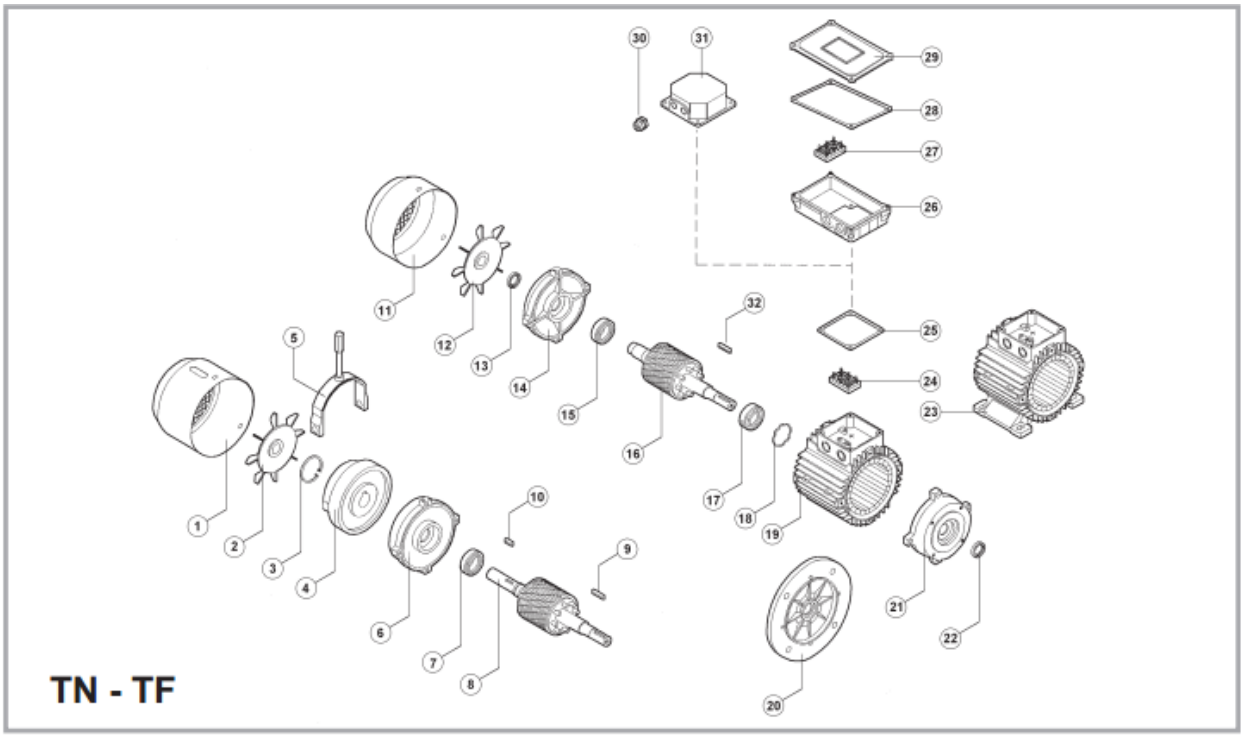

1	Copriventola	*Fan cover*	Lüfterhaube
2	Ventola	*Fan*	Lüfter
3	Seeger	*Circlip*	Seeger
4	Freno	*Brake*	Bremse
5	Leva di sblocco	*Hand release*	Handlüftung
6	Scudo posteriore	*Non drive end shield*	Hinteres Lagerschild
7	Cuscinetto	*Bearing*	Lager
8	Rotore	*Rotor*	Rotor
9	Linguetta	*Key*	Keil
10	Linguetta	*Key*	Keil
11	Copriventola	*Fan cover*	Lüfterhaube
12	Ventola	*Fan*	Lüfter
13	Anello di tenuta	*Oilseal*	Dichtring
14	Scudo posteriore	*Non drive end shield*	Hinteres Lagerschild
15	Cuscinetto	*Bearing*	Lager
16	Rotore	*Rotor*	Rotor
17	Cuscinetto	*Bearing*	Lager
18	Molla di precarico	*Pre load spring*	Vorspannfedern
19	Cassa B5-B14	*B5/B14 housing*	Gehäuse B5-B14
20	Flangia B5	*B5 Flange*	Flansch B5
21	Scudo anteriore (B14)	*Drive end shield (B14)*	Vorderes Lagerschild (B14)
22	Anello di tenuta	*Oilseal*	Dichtring
23	Cassa con piedi	*Foot casing*	Gehäuse mit Fuß
24	Morsettiera	*Terminal board*	Klemmbrett
25	Guarnizione	*Gasket*	Dichtung
26	Scatola morsettiera	*Terminal box*	Klemmenkasten
27	Morsettiera	*Terminal board*	Klemmbrett
28	Guarnizione	*Gasket*	Dichtung
29	Coperchio morsettiera	*Terminal box cover*	Klemmenkastendeckel
30	Pressacavo	*Cable gland*	Kabelverschraubung
31	Scatola morsettiera	*Terminal box*	Klemmenkasten
32	Linguetta	*Key*	Keil

	Cuscinetti *Bearings* Kugellager 15 — 17	Cuscinetti *Bearings* Kugellager 7
55	6201-2Z	—
56	6201-2Z	6201-2RS
63	6202-2Z	6202-2RS
71	6203-2Z	6003-2RS
80	6204-2Z	6204-2RS
90	6205-2Z	6205-2RS
100	6206-2Z	6206-2RS
112	6306-2Z	6306-2RS
132	6308-2Z	6308-2RS
160	6309-2Z	6309-2RS
180	6310-2Z	—
200	6312-2Z	—

Osoite/Address:
Hovinsaari, Puolanlaituri
FI-48200 KOTKA
FINLAND

Puhelin/Phone/Internet:
Nat (10) 420 4050
Int +358 10 420 4050
www.rojomachines.com
info@rojomachines.com

Fax:
Nat (05) 2269 050
Int + 358 5 2269 050

Pankki/Bank:
Pohjola Bank
Swift: OKOYFIHH

Account No:
FI9051720220067756

Oil type, quantity and oil change interval

The worm gear is delivered with a synthetic Shell Tivela Sc320 gear oil. Quantity of the gear oil is 0,6 liters.

Oil change interval is determined by operating conditions:

Frequenza cambi olio [h]
Oil change intervals [h]
Frequenz - Ölwechsel [h]

Tipo olio *Oil type* Öltyp	Temperatura olio *Oil temperature* Öltemperatur		
	65°C	80°C	90°C
Minerale *Mineral* Mineralöl	8000	3000	1000
Sintetico *Synthetic* Synthetiköl	20000	15000	9000

Osoite/Address:
Hovinsaari, Puolanlaituri
FI-48200 KOTKA
FINLAND

Puhelin/Phone/Internet:
Nat (10) 420 4050
Int +358 10 420 4050
www.rojomachines.com
info@rojomachines.com

Fax:
Nat (05) 2269 050
Int + 358 5 2269 050

Pankki/Bank:
Pohjola Bank
Swift: OKOYFIHH

Account No:
FI9051720220067756