Operating Instructions

Continuous Mixer D20

230/400 V 50 Hz

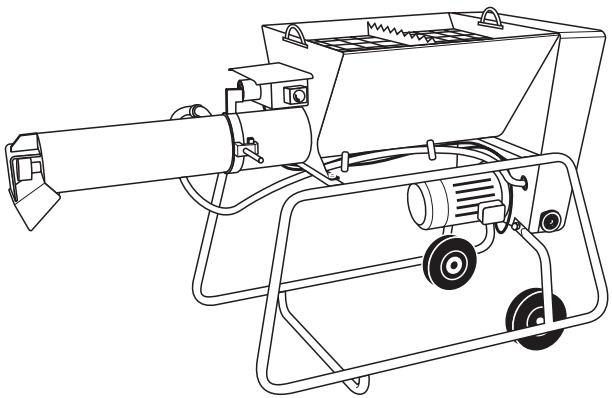

392570 – 01/99

Technical development:
The manufacturer reserves the right to modify technical data without notification in order to reflect the current state of technical development. For information regarding the current status, alterations or additions to these operating instructions, please contact m-tec.

D20 230/400 V – 392570 – 01/99

Dear Customer,

this machine represents the current state of the art and complies fully with general standards and EEC guidelines. This is indicated by the CE symbol and the enclosed declaration of conformity in the pocket on the machine.

Before starting the machine for the first time, please remove the declaration of conformity from the pocket and keep it in a safe place.

Before starting the machine up, please complete the form below. This is the easiest way to familiarise yourself with the characteristics of the machine, and the main data can be consulted at any time without reading them off the rating plate on the machine. If you wish to consult us at any time, please have the information on this page ready at hand. The data you require can be found on the machine plate.

Type	
Machine no.	
Year of manufacture	
Connected load	
Current consumption (total)	
Date of first use	
Application	

D20 230/400 V – 392570 – 01/99

1 Safety

This machine has been built in accordance with the current state of the art and has left the manufacturer's plant in perfect condition. However, it may be dangerous if used incorrectly, for the wrong purpose, or by untrained personnel. All persons using the machine must therefore read and understand the operating instructions, in particular the section entitled "Safety" before starting the machine. To avoid unnecessary damage and ensure efficient operation, the user should also familiarise himself with the operation of the machine.

To ensure that they are permanently available for consultation, the operating instructions should be kept in the special pocket on the machine at all times.

It is prohibited to modify the machine in any way. Use only spare parts and lubricants approved by m-tec mathis technik gmbh.

1.1 Symbols used in these Operating Instructions

In these instructions, the following symbols are used:

This symbol is used to identify danger of serious injury. Pay particular attention to these instructions and to the safety of other persons in the vicinity of the machine and its components.

This symbol is used to identify potential danger to the material or the machine. Observe these instructions to avoid damage to property.

ATTENTION!

This symbol is used to indicate that environmental legislation must be observed.

This symbol is used to indicate additional information on the machine which may be useful or helpful.

1.2 Safety notes

When transporting, assembling, dismantling, operating, cleaning, and servicing the machine, the applicable national and international safety regulations and legislation must always be observed, even if such regulations and legislation are not explicitly mentioned in these instructions.

The following instructions must also be observed at all times:

- The machine must be positioned firmly on a level surface. It must be secured to prevent it from tilting or moving.
- The machine must be positioned in an area where no objects can fall onto it from above. If this is not possible, it must be protected by a roof.
- The machine must be positioned in such a way that all the operating elements are easily accessible at all times.
- Before working on electrical components, always pull out the power plug, as certain components remain live even when the machine is switched off.
- Before every shift, the machine must be carefully inspected for signs of damage, in particular to electric cables, plugs and couplings. Any damage must be repaired before beginning work!
- Safety fittings – the grid on the mortar funnel and the hood protecting the wedge-belt drive – must be correctly installed and fastened before starting the machine.
- The machine must be connected only to a regulation site distributor box fitted with an FI automatic circuit breaker.

- For the 230 V version of the machine, fuse protection must be at least 16 A.
- For the 400 V version of the machine, fuse protection must be at least 10 A.
- The connection cable for the 230 V version of the machine must have a cross section of at least 3 x 2.5 mm^2 and be fitted with a connector with an earthing contact.
- The connection cable for the 400 V version of the machine must have a cross section of at least 5 x 1.5 mm^2 and be fitted with an EEC connector coupling.
- Never put your hands into the machine when it is in operation!
- Do not put your hands into the mortar outlet!
- Before repairing malfunctions or cleaning or maintaining the Continuous Mixer D20, always switch it off and pull out the power plug.

2 Description of machine

2.1 Intended use

The Continuous Mixer D20 is a universally applicable machine for mixing dry, ready-mixed mortars such as:

Masonry mortar
Various types of plaster
Adhesive mortar
Floor cement
Fine concrete

The machine is designed to be filled with bagged material. Additional fittings are required for use with material from a silo.

Use of the machine for any other purpose than those described above is prohibited.

2.2 Method of function

An electric motor powers a belt drive which in turn drives a feed screw which transports the dry material from the material trough into the mixing pipe. In the mixing pipe, the material is mixed with water by a mixing shaft and then conveyed out of the pipe.

The consistency of the material can be set by adjusting the amount of water at the fine-adjustment valve. A solenoid valve cuts off the water supply when the machine is switched off.

The machine can also be supplied with a built-in pump for increasing the water pressure.

A safety flag ensures that the mixing pipe is uncoupled only when the power plug has been extracted previously.

2.3 Machine diagram

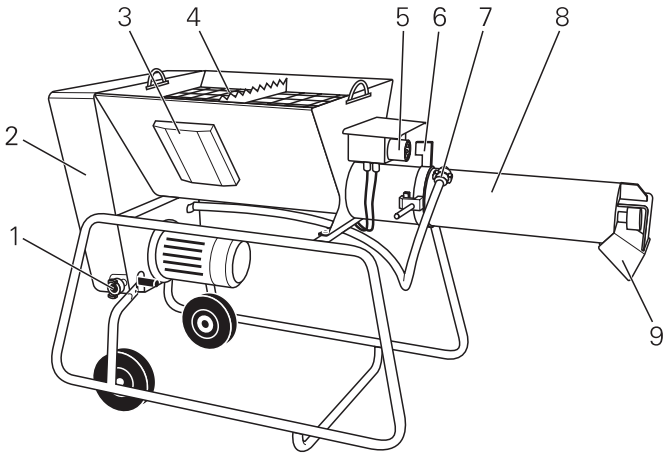

Fig. 1: Overall view, right

1 *Water inlet*
2 *Covering hood*
3 *Pocket for Operating Instructions*
4 *Safety grid with bag opener*
5 *Infeed plug*
6 *Safety flag*
7 *Water connection for mixing pipe*
8 *Mixing pipe*
9 *Mortar outlet*

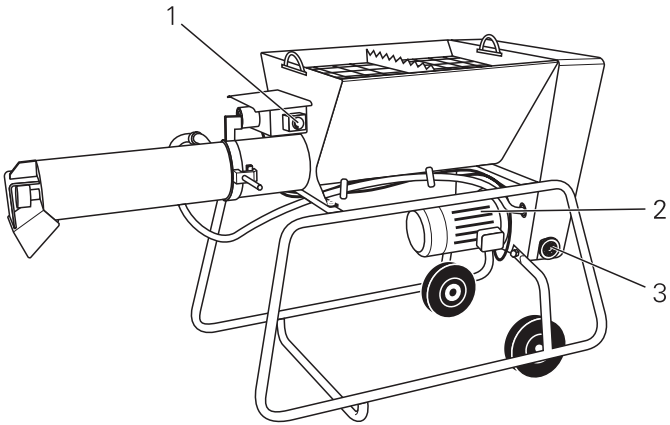

Fig. 2: Overall view, left

1 *Switch cabinet with On/Off switch*
2 *Drive motor*
3 *Fine-adjustment valve, water*

Fig. 3: Drive system and water fitting

1 *Fine-adjustment valve, water*
2 *Solenoid valve*
3 *Draining valve*
4 *Pressure reducer with water sieve*
5 *Water inlet with sieve*
6 *Wedge belt*

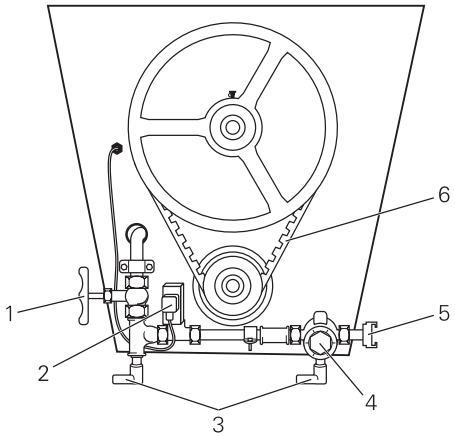

2.4 Operating elements

The machine is switched on and off by means of a double push button on the switch box. In emergencies, the machine can be switched off quickly via a red emergency switch.

Fig. 4: On/Off switch

1 *Button On/Off with emergency stop*

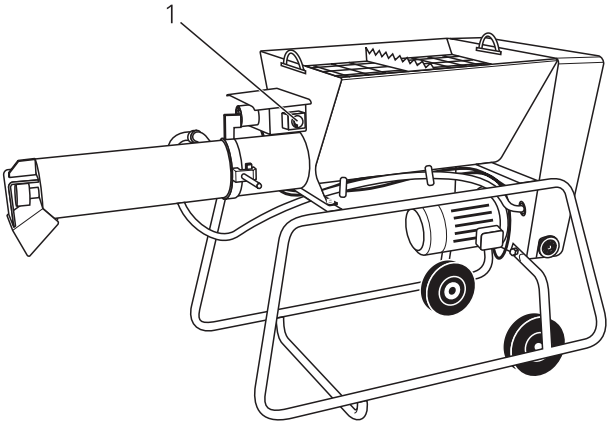

2.5 Signs and markings on the machine

Danger! High voltage

Keep hands away from running machine!

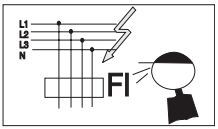

Connect via FI safety switch only

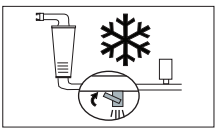

Empty water fitting at low temperatures

Storage pocket for Operating Instructions

2.6 Technical Data

Weights and dimensions

Dimensions	Length:	1700 mm
	Width:	700 mm
	Height:	1000 mm
Weight:	approx. 90 kg	
Noise level:	66 dB (A); noise-pressure level at 1 m distance, free-field measurement during operation	

Water connection

Connection:	3/4"-water hose with GEKA coupling (supplied)
Water pressure:	min. 4 bars

Motor 230 V

Voltage:	230 V 1 Ph
Frequency:	50 Hz
Power:	2.2 kW
Rated speed :	262 r.p.m. (200 r.p.m. for D20 with enhanced starting torque)
Mixing power:	approx. 20 l/min
Connection:	via FI-safety switch, fuse protection min. 16 A, connected load 14 A, power-supply cable 3 x 2.5 mm^2

Water pump 230 V (model with water pump only)

Voltage:	230 V 1 Ph
Frequency:	50 Hz
Power:	0.37 kW

Motor 400 V

Voltage:	400 V 3 Ph
Frequency:	50 Hz
Power:	2.2 kW
Rated speed :	262 r.p.m.
Mixing power:	approx. 20 l/min
Connection:	via FI-safety switch, fuse protection min. 10 A, connected load 6 A, power-supply cable 5 x 1.5 mm^2

Water pump 400 V (model with water pump only)

Voltage:	400 V 3 Ph
Frequency:	50 Hz
Power:	0.37 kW

3 Transport and positioning

When transporting, assembling, dismantling, operating, cleaning, and servicing the machine, the applicable national and international safety regulations and legislation must always be observed, even if such regulations and legislation are not explicitly mentioned in these instructions.

3.1 Transporting the machine

- Empty the material trough before moving the machine
- When moving the machine with a crane or lifting gear, the tackle used (e.g. rope or belt) must have a minimum load-bearing capacity of 300 kg.
- Fasten the belt or rope to the special lugs on the machine (Fig. 5)

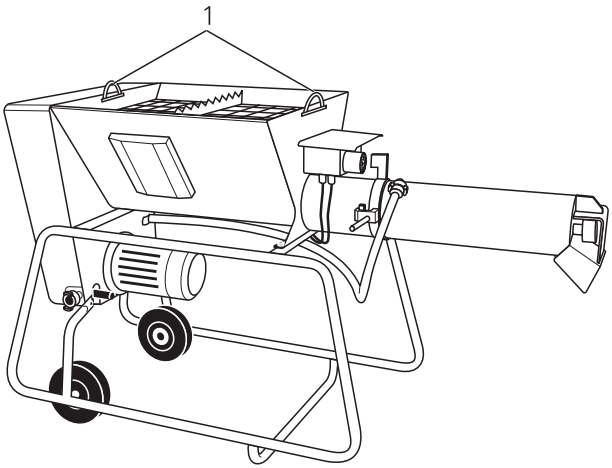

Fig. 5. Transporting the machine

1 Lugs

3.2 Positioning the machine

The machine must be positioned firmly on a level surface. It must be secured to prevent it from tilting or moving.

The machine must be positioned outside danger zones where overhead work is in progress. If this is not possible, it must be protected from falling objects by a roof.

The machine must be positioned in such a way that all the operating elements are easily accessible at all times.

4 Start-up

When transporting, assembling, dismantling, operating, cleaning, and servicing the machine, the applicable national and international safety regulations and legislation must always be observed, even if such regulations and legislation are not explicitly mentioned in these instructions.

Before every shift, the machine must be carefully inspected for signs of damage, in particular to electric cables, plugs and couplings. Any defects or damage must be repaired before beginning work

4.1 Preparations for filling with bagged material

The machine is designed for filling with material supplied in bags. For use with material from a hopper, additional fittings are required (filter hood and feeder unit or transfer hood). See section 9, Accessories.

When assembling, observe the instructions for the feeder unit and/or transfer hood.

Pull the power-supply cable out of the coupling in the switch box.

- Remove the safety grid from the mortar trough
- When using a feeder unit: mount the filter hood and connect the feeder hoses of the feeder unit
- When using a transfer hood: fasten the transfer hood securely to the continuous mixer with the fastening set supplied. Couple the adapter to the flange of the silo and open the rotating flap of the silo.

4.2 Water connection

- Connect the internal water hose to the GEKA coupling on the mixing pipe
- Connect the machine to the water inlet using a hose with a 3/4" GEKA coupling
- Turn on the water supply

4.3 Power supply

The machine must be connected only to a regulation site distributor box fitted with an FI automatic circuit breaker.

For the 230 V version of the machine, fuse protection must be at least 16 A.

For the 400 V version of the machine, fuse protection must be at least 10 A.

The connection cable for the 230 V version of the machine must have a cross section of at least 3 x 2.5 mm² and be fitted with a connector with an earthing contact.

The connection cable for the 400 V version of the machine must have a cross section of at least 5 x 1.5 mm² and be fitted with an EEC connector coupling.

Before connecting the machine to the power supply, ensure that the mixing pipe is correctly attached.

- Connect the power cable to the infeed plug.

4.4 Setting direction of rotation (400 V version only)

- Switch the machine on at the main On switch
- Observe the direction of rotation of the feeder screw in the material trough.

ATTENTION!

If the direction does not correspond to that indicated by the arrow on the machine, the correct direction must be set.

To do this:
- switch the machine off at the Off switch
- pull the power-supply cable out of the coupling in the switch box
- using a screwdriver, turn the polarity inverter on the input plug 180 degrees
- re-insert the coupling of the power cable

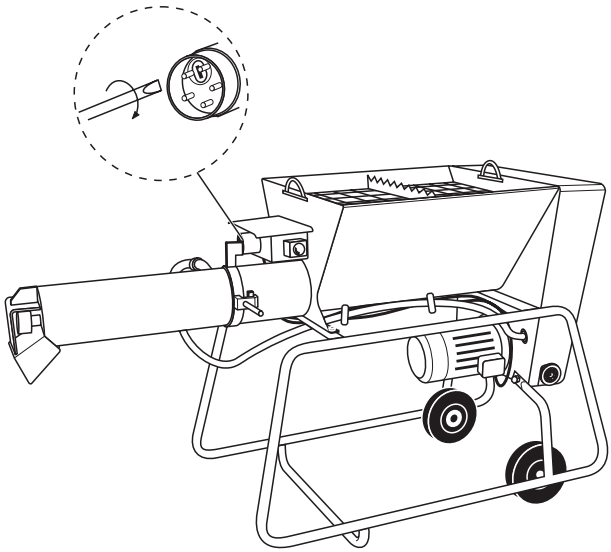

Fig. 6: Setting direction of rotation

5 Operation

When transporting, assembling, dismantling, operating, cleaning, and servicing the machine, the applicable national and international safety regulations and legislation must always be observed, even if such regulations and legislation are not explicitly mentioned in these instructions.

Safety fittings – the grid on the mortar funnel and the hood protecting the wedge-beld drive – must be correctly installed and fastened before starting the machine.

Do not put your hands into the mortar outlet!

5.1 Filling with bagged material

- Open one sack at a time on the grid of the material trough and allow material to fall into the trough.

Dispose of empty mortar sacks in accordance with environmental legislation.

5.2 Filling with silo material

Always observe the operating instructions for the feeder equipment or transfer hood!

5.3 Adjusting material consistency

- Switch the machine on at the main On switch
- Check the mortar emerging from the material outlet

Do not put your hands into the mortar outlet!

- If required, adjust the material consistency by setting the fine-adjustment valve (anti-clockwise direction = more water, clockwise direction = less water)

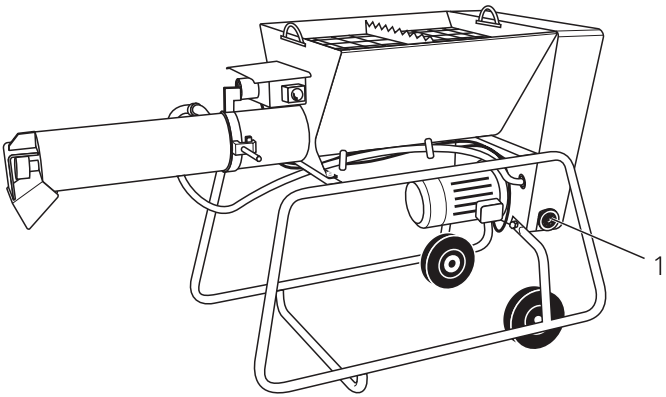

Fig. 7: Adjusting the material consistency

1 Fine-adjustment valve

5.4 Intervals in work

During intervals in work, remember the setting time of the material being used. Hardened or partially set material may cause difficulty in starting the machine. The machine may also be seriously damaged.

ATTENTION!

The material sets more rapidly at high temperatures.

- Before long intervals in work, empty the machine and clean it thoroughly. See section 6.

5.5 Winter operation

Under sub-zero temperatures, the machine may be seriously damaged if components filled with water are allowed to freeze!

ATTENTION!

Before intervals in work and after cleaning the machine, the water fittings must be completely emptied. To do this:

- remove the feed hoses and empty them
- open the draining valves of the water fittings
- close the draining valves before using the machine again.

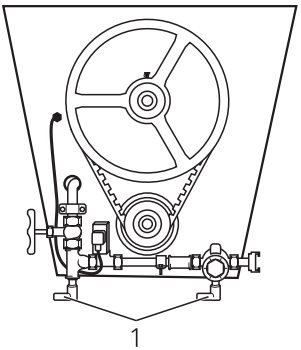

Fig. 8: Emptying the water fitting

1 Draining valves

6 Cleaning

- Allow the machine to run until empty
- Switch the machine off at the off switch

Pull out the power plug

- Shut off the water supply
- Disconnect the hose from the mixing pipe
- Remove the mixing pipe; turn it by the hand grips until it releases and then pull it off the machine

Caution! Do not allow the mixing pipe to drop to the ground!

- Remove the mixing shaft
- Clean the mixing pipe and shaft with a water hose and brush
- Remove the safety grid on the material trough

ATTENTION!

Always keep the material trough and material pipe dry!

- Clean the dry material trough and pipe with a brush
- Replace the safety grid and secure it with the bolt

ATTENTION!

Ensure that the coupling of the mixing shaft is clean, dry and free of grease. Otherwise it may be impossible to release the coupling!

- Replace the clean mixing shaft in the pipe
- Couple the mixing pipe with shaft back onto the machine

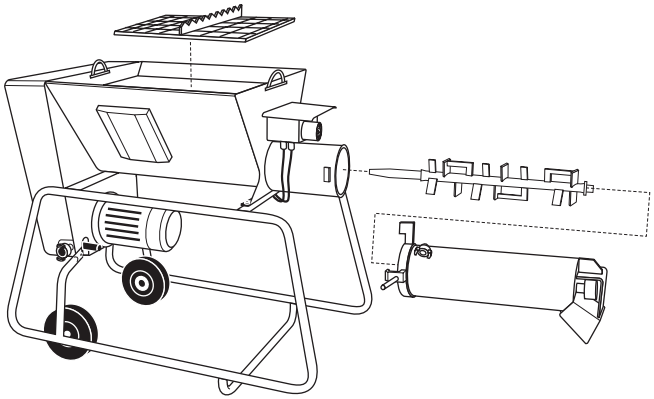

Fig. 9: Cleaning the machine

7 Maintenance and servicing

Before carrying out maintenance work, always pull out the power plug, as certain components remain live even when the machine is switched off.

To ensure its safety in operation, the machine must be inspected by a specialist technician in accordance with the regulations in force. It should be inspected at least once per year.

7.1 Routine maintenance

- Check the condition of cable connections, plugs and hoses at regular intervals

Lubricate the following grease points with 1 or 2 shots of grease every four to six weeks using a grease gun

- mixing shaft bearings (Fig. 10, 1) unless the machine is fitted with a sliding bearing (see section 7.2)
- drive-shaft bearing (Fig. 10, 2) after removing the cover hood

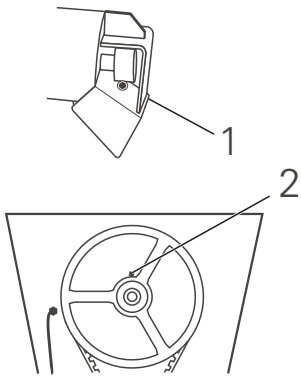

Fig. 10:
Lubrication points

1 Mixing shaft bearing
2 Drive-shaft bearing

7.2 Sliding bearing

The sliding bearing and the bearing bush must be checked regularly for signs of wear and if necessary replaced:

- Remove metal clamp (Fig. 11, 1)
- Remove the sliding bearing. If necessary press it out from behind with a rod and replace
- Re-attach the metal clamp in the recesses provided on the bearing.

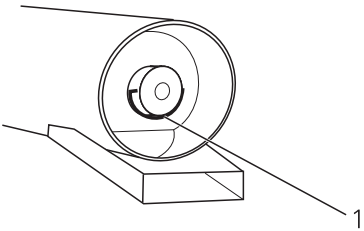

Fig. 11: Replace sliding bearing

1 Metal clamp

7.3 Wedge belt

The tension of the wedge belt should be checked every four to six weeks.

- Remove the cover hood
- Check wedge-belt tension

ATTENTION!

It should not be possible to press the wedge belt down by more than 1 cm.

If necessary, tension the wedge belt ; to do this:

- Loosen the locking nut of the tensioning cam (Fig. 12,2)
- Loosen the mounting bolts of the motor flange (Fig. 12, 3)
- Turn the tensioning cam (Fig. 12, 1) until the belt reaches the correct tension
- Re-tighten the locking nut on the tensioning cam and the mounting nuts of the motor flange
- Replace and fasten the cover hood

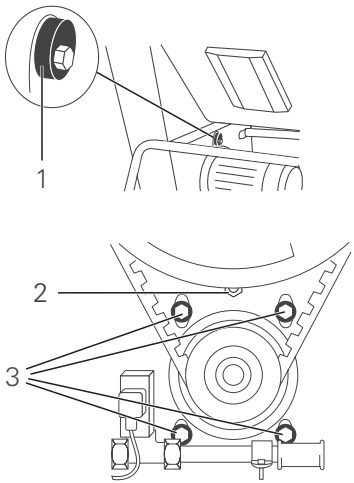

Fig. 12: Tensioning the wedge belt

1 Tensioning cam
2 Locking nut of the tensioning cam
3 Mounting bolts of the motor flange

7.3 Cleaning the water sieves

The water sieves in the water fitting must be removed and cleaned every four to six weeks. To do this:

- Remove the cover hood
- Remove and clean the water sieves in the water infeed and pressure reducer: rinse them with water and – if necessary – blow them out with air (Fig. 13)
- Replace the clean sieves
- Replace and fasten the cover hood.

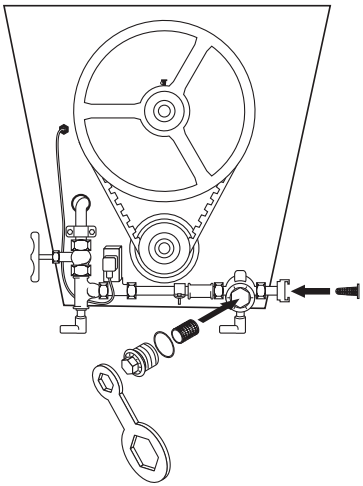

Fig. 13: Cleaning the water sieves

8 Troubleshooting

The troubleshooting table is not intended to replace the detailed instructions in the individual sections of these Instructions. Always observe the safety instructions in the above sections.

Fault	Cause	Remedy
Motor does not start	No power	Check plug and cable
	Overload fuse (thermal circuit breaker) triggered; this causes the On switch to de-activate automatically	Allow overload switch to cool off; find reason for overload (e.g. blockage of mixing shaft) and remedy it; press the On switch in again
	Mortar has set in mixing pipe (interval too long)	Clean mixing pipe
No water feed	Water infeed not open	Open water feed
	Solenoid valve does not open	Solenoid-valve cable or coil defective; replace
Mortar too thick	Too little water	Open the fine-adjustment valve
		If water pressure under 4 bars, use additional water pump
Mortar too thin	Too much water	Close fine-adjustment valve slightly
Uneven mortar consistency	Water sieve in pressure reducer or water infeed clogged	Clean water sieve
Machine does not mix, squeaking noises	Wedge-belt tension too low	Tension wedge belt and replace if necessary

9 Spare parts and accessories

Modifications to the machine are prohibited. Use only spare parts and accessories supplied by m-tec mathis technik gmbh. If spare parts and accessories of other types are used, m-tec mathis technik gmbh will assume no liability for any accidents which may occur.

Orders for spare parts and accessories should be addressed to:

m-tec mathis technik gmbh, Sales Dept.
Tel.: +49 (0) 7631 / 709-112 or -216
Fax: +49 (0) 7631 / 709-116

The following accessories can be ordered separately:

- Additional water pump
- Flow meter
- Rim for increasing capacity of material trough when processing insulating plaster
- Filter hood for filling with a feeder conveyor
- Transfer hood for filling with a silo

10 Circuit diagrams

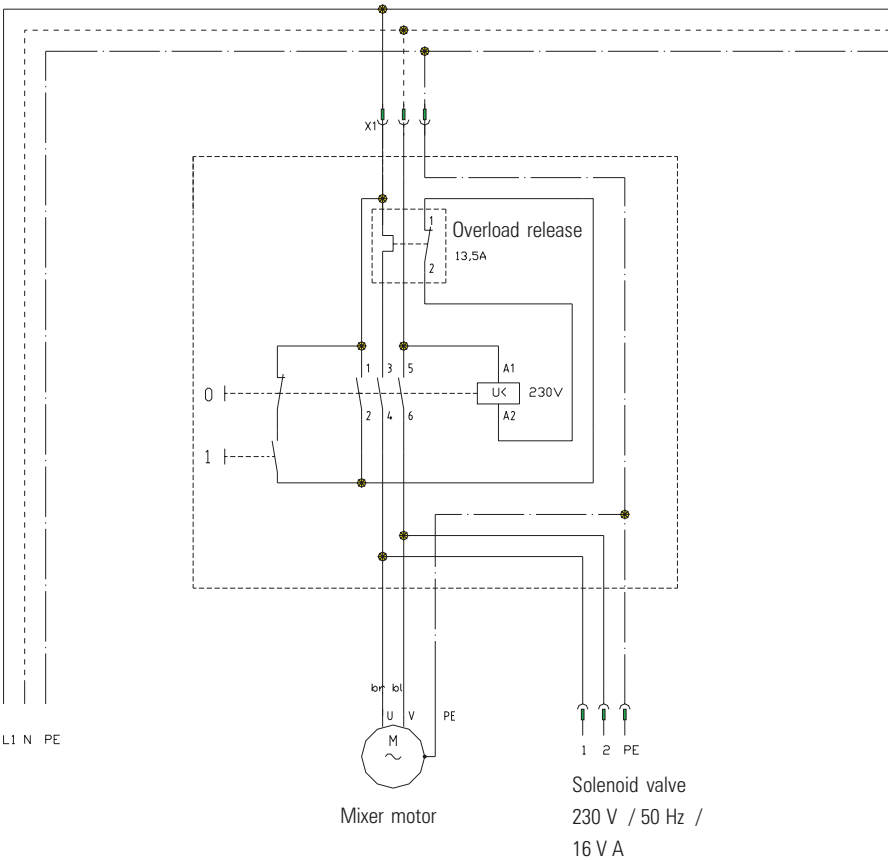

Fig. 14: Circuit diagram D 20 230 V 1 ph 50/60 Hz

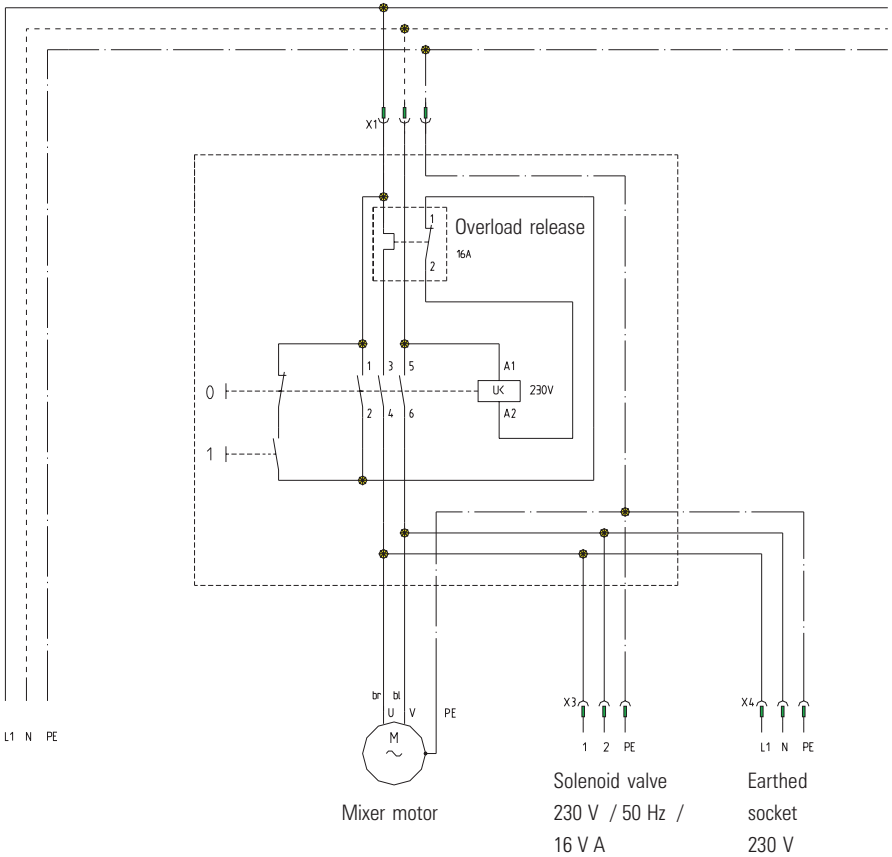

Fig. 15: Circuit diagram D 20 with earthed socket 230 V 1 ph 50/60 Hz

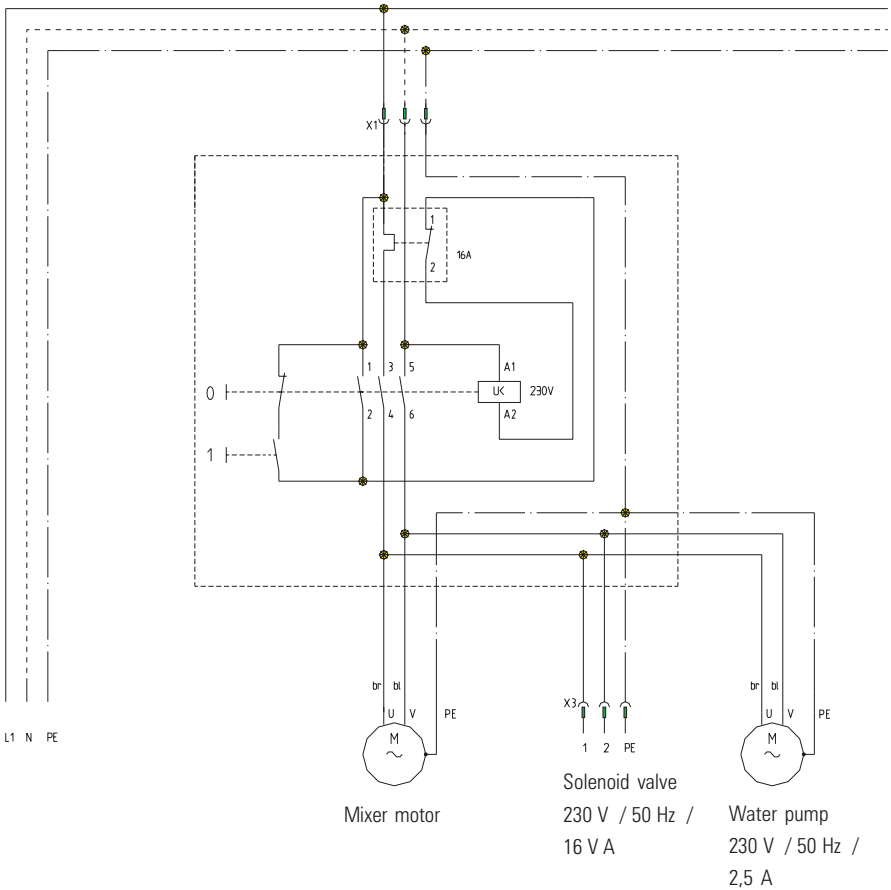

Fig. 16: Circuit diagram D 20 with water pump 230 V 1 ph 50/60 Hz

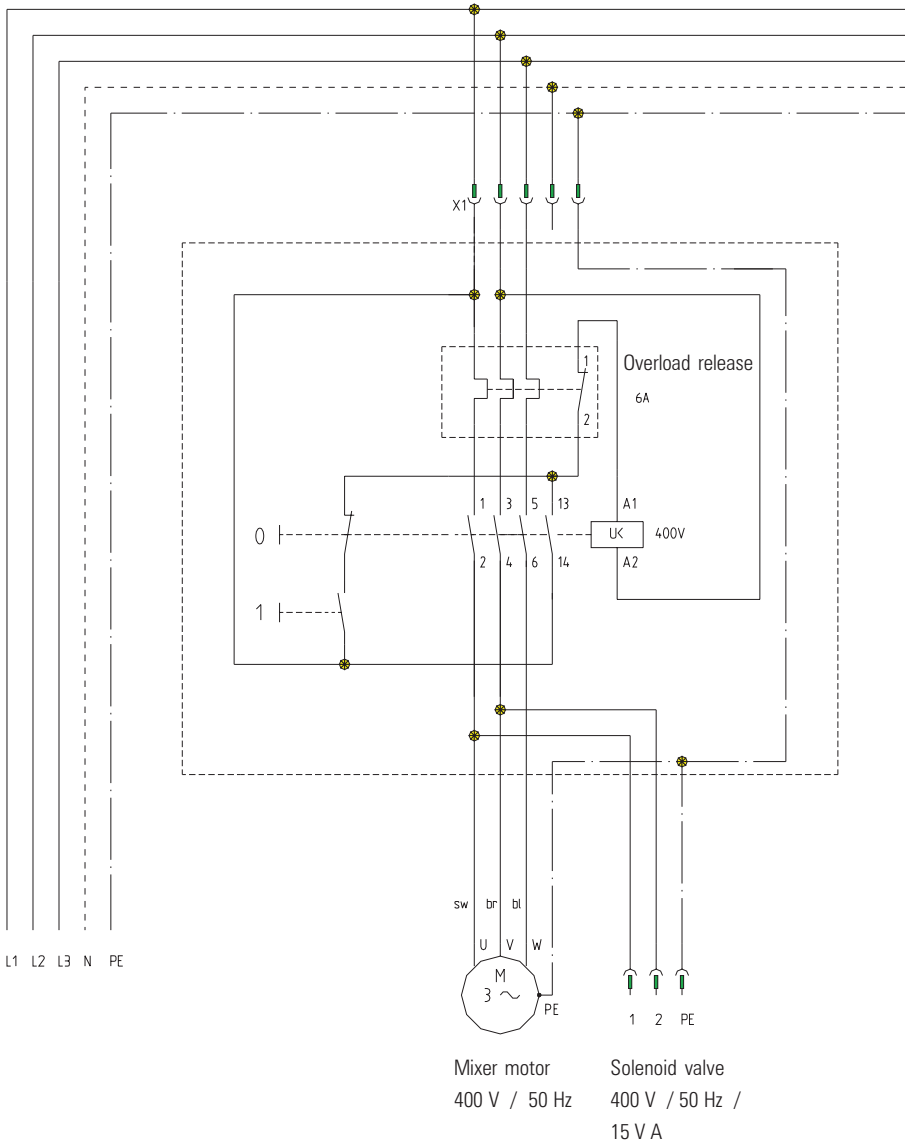

Fig. 17: Circuit diagram D 20 400 V 3 ph 50 Hz

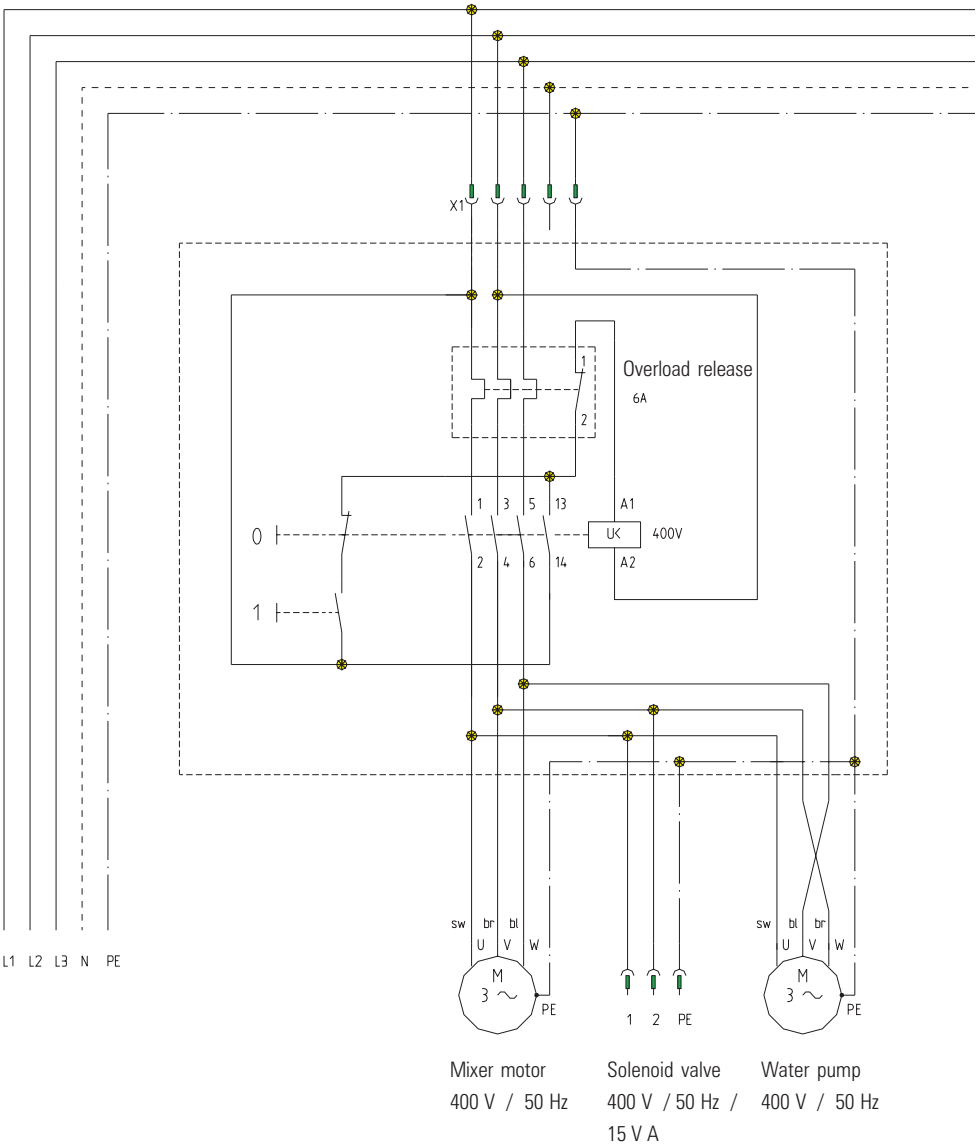

Fig. 18: Circuit diagram D 20 with water pump 400 V 3 ph 50 Hz

D20 230/400 V – 392570 – 01/99