Page

Contents

Complete Machines with Scope of Supplies 2

Accessories 3

Spare Parts

D20-II 230V, with Standard Mixing Pipe 4 - 5
D20-II 230V, with Concrete Mixing Pipe 6 - 7
D20-II 230V, with Concrete Mixing Pipe and increased Starting Torque 8 - 11
D20-II 400V, with Concrete Mixing Pipe 12 - 13
Switch K3000 14 - 15
Electric Control System, 400V 16 - 17
Water Fitting (230V/400V) 18 - 19
Water Pump NT61 kpl. 400V / NTM 61, compl., 230V 20 - 21
Water pump PQ60, compl., 400V / PQ m60, compl., 230V 20 - 21

Flow Meter 22 - 23

For further accessories as well as the spare parts of the accessories please refer to catalogue "Accessories"

Supplied by :- Markham (Sheffield) Ltd - Tel:- +44 (0)1909 730861 - www.markham-sheffield.co.uk

continuous mixer for bagged material, silo material and for pneumatic charging

D20

562105	D20-II 230V 50Hz 1ph 2.2kW - with standard mixing pipe
562120	D20-II-BM 230V 50Hz 1ph 2.2kW - with concrete mixing pipe
562130/001	D20-II-BM-WP 230V 50Hz 1ph 2,2kW - 16A 3pole 6h with concrete mixing chamber and water pump
562125	D20-II-BM-AM 230V 50Hz 1ph 2.2kW - with concrete mixing pipe and increased starting torque
562135	D20-II-BM 400V 50Hz 3ph 2.2kW - with concrete mixing pipe
562140	D20-II-BM-WP 400V 50Hz 3ph 2.2kW - with concrete mixing pipe and water pump

Supplied by :- Markham (Sheffield) Ltd - Tel:- +44 (0)1909 730861 - www.markham-sheffield.co.uk

D20 Accessories

Ordering No.	Description
601351/001	External water pump, 230V
601185	Suction hose, 3/4", 4m, compl.
602307	Water hose, 3/4", 20m with GEKA coupling
561237	Flow meter, D20, compl.
561138	Cover for material trough
561118	Extension Hopper
561156	Feeding hood, D20/230/400V, without control system
561155	Feeding hood, D20/230V, with vibr. control system (Shock-proof plug)
561150	Feeding hood, D20/400V, with vibr. control system (16A 5 pol 6h)
552860	Filter hood incl. DFS, compl.
552865	Fixing set for filter hood, delivery hood or extension hopper (not within D20 scope of supplies)
561126	Dosing component, D20, 25 pitch
561725	Retrofit kit, D20, with intermediate drive for increased starting torque

Supplied by :- Markham (Sheffield) Ltd - Tel:- +44 (0)1909 730861 - www.markham-sheffield.co.uk

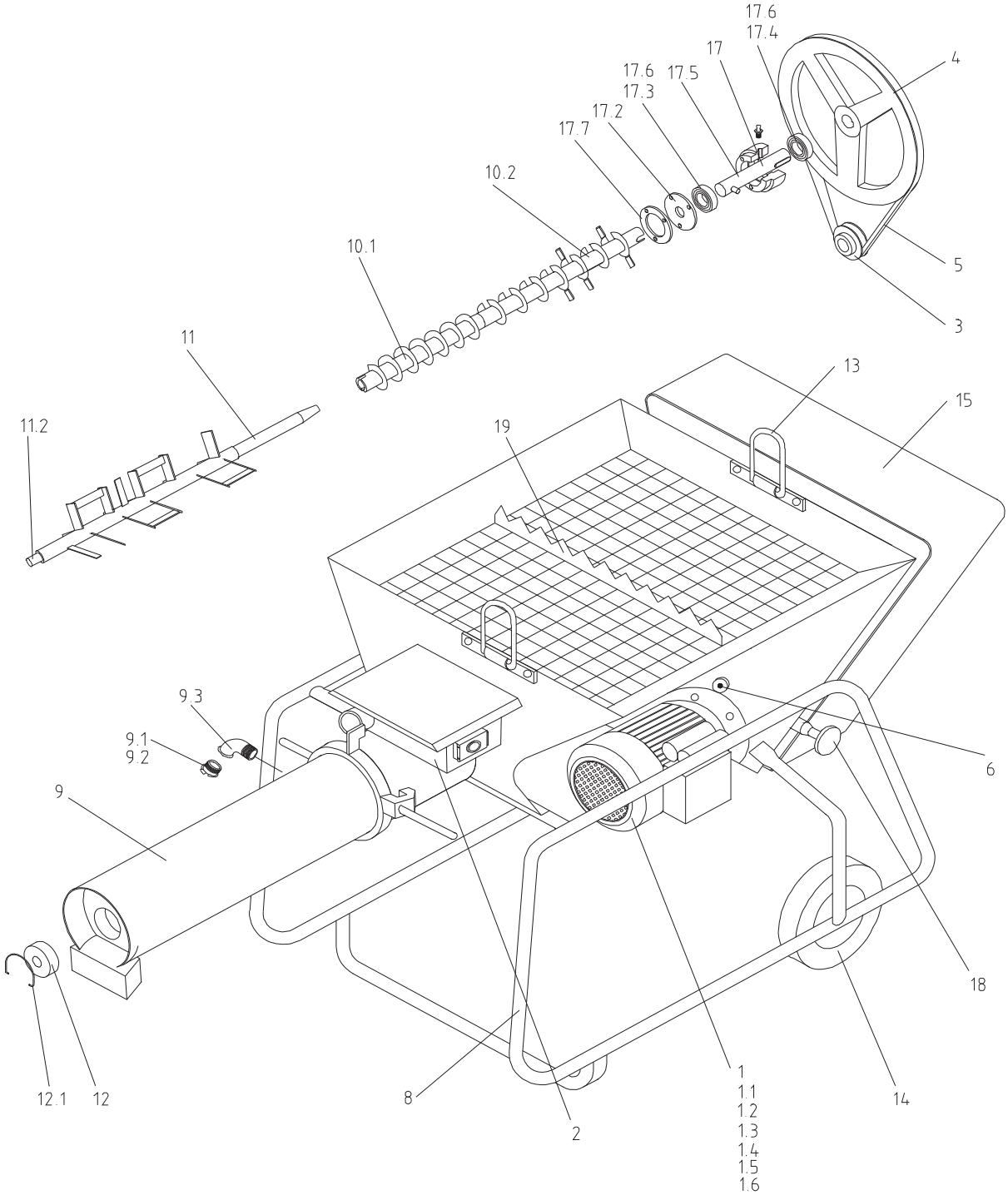

Supplied by :- Markham (Sheffield) Ltd - Tel:- +44 (0)1909 730861 - www.markham-sheffield.co.uk

D20-II 230V 50Hz 1ph (from 01/1999)

Item	Ordering No.	Description
0	**562105**	**D20-II 230V 50Hz 1ph**
1	561003	Electric motor, 2.2kW, 230V/50Hz
1.1	561296	Starting capacitor, 100µF
1.2	561297	Starting capacitor, 150µF
	Attention :	**Install both capacitors in the terminal box.**
1.3	561294	Control capacitor, 25µF (2 x)
	Attention :	**Capacitor must be installed twice on motor.**
1.4	603093/001	current relay 200V (grey), for type LS 90 PR
1.4	561924	Centrifugal switch (for LS 90 PC model)
1.5	561028	Fan guard
1.6	561029	Fan blade
1		Electric motor, 2.2kW, 230V/50Hz
1.1	561035	Starting capacitor, 160µF
1.3	561036	Control capacitor, 31.5µF
1.4	561037	Centrifugal switch
2	562106	Switch K3000, 230V 50-60Hz, single-phase
	For switch spare parts, refer to pages 14-15	
3	561006	V-belt pulley, aluminium, 63mm dia
4	561008	V-belt pulley, aluminium, 315mm dia
5	561030	V-belt, 9.5x1175mm
6	562123	Clamping eccentric (until 12/01)
8	562150	Tubular frame rack (from 01/02)
9	562132/001	mixing pipe compl.
9.1	561263	GEKA coupling, 1/2", external thread
9.2	561273	Seal for GEKA coupling, packing unit 10 pieces
9.3	561222	Elbow, 1/2", internal/external thread
10.1	561115	Dosing component, 35 pitch (within scope of supplies)
	561126	Dosing component, 25 pitch
10.2	561121	Conveyor screw without dosing component
	561121/002	Conveyor screw without dosing component, scope of supply (optimum discharge), optional
11	561108	Mixing shaft
11.2	561113	Metal bearing bush
12	561110	Plain bearing for mixing shaft
12.1	561097	Tension clamp for plain bearing
13	562124	Jack ring, screwable
14	560072	Solid rubber wheel, 200mm dia. (until 12/01)
14	549152	Solid rubber wheel, 260mm dia. (from 01/02)
15	561116	Covering hood
17	561109	Drive shaft, compl.
17.2	561289	Rubber sealing disk
17.3	600031	Deep groove ball bearing 6005
17.4	600030	Deep groove ball bearing 6005 RSR
17.5	561258	Drive shaft, 25mm dia.
17.5.1	561125	Spiral dowel pin DIN7344
17.6	561259	Circlip 25 x 1.2
17.7	561290	Sealing flange
18	**For water fitting, refer to pages 18-19**	
19	561112	Protective grid with bag opener

Supplied by :- Markham (Sheffield) Ltd - Tel:- +44 (0)1909 730861 - www.markham-sheffield.co.uk

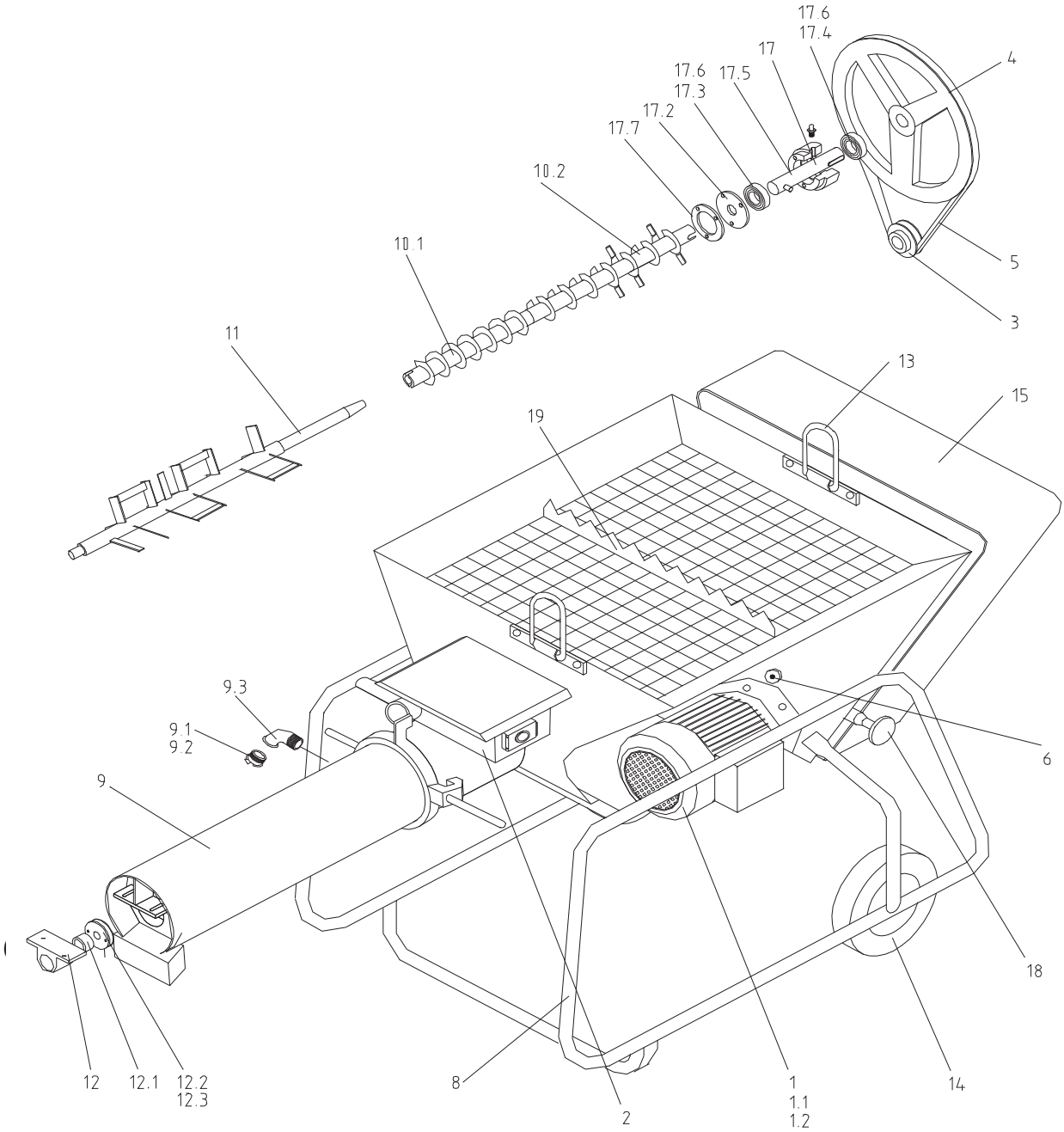

Supplied by :- Markham (Sheffield) Ltd - Tel:- +44 (0)1909 730861 - www.markham-sheffield.co.uk

D20-II-BM 230V 50Hz 1ph (from 01/1999)

Item	Ordering No.	Description
0	**562120**	**D20-II-BM 230V 50Hz 1ph**
0	**562130/001**	**D20-II-BM-WP compl. 230V with water pump**
1	561003	Electric motor, 2.2kW, 230V 50Hz
1.1	561296	Starting capacitor, 100µF
1.2	561297	Starting capacitor, 150µF
	Attention :	**Install both capacitors in the terminal box.**
1.3	561294	Control capacitor, 25µF (2 x)
	Attention :	**Capacitor must be installed twice on motor.**
1.4	603093/001	current relay 200V (grey), for type LS 90 PR
1.4	561924	Centrifugal switch (for LS 90 PC model)
1.5	561028	Fan guard
1.6	561029	Fan blade
1		Electric motor, 2.2kW, 230V 50Hz
1.1	561035	Starting capacitor, 160µF
1.3	561036	Control capacitor, 31.5µF
1.4	561037	Centrifugal switch
2	562106	Switch K3000, 230V 50-60Hz, single-phase
	562108/001	Switch K3000, 230V 50-60Hz/single-phase 16A 3pole 6h, with waterpump
	For switch spare parts, refer to pages 14 - 15	
3	561006	V-belt pulley, aluminium, 63mm dia
4	561008	V-belt pulley, aluminium, 315mm dia
5	561030	V-belt, 9.5 x 1175mm
6	562123	Clamping eccentric
8	562113	tubular frame rack (until 12/01)
8	562150	tubular frame rack (from 01/02)
9	562131/001	mixing pipe compl.
9.1	561263	GEKA coupling, 1/2", external thread
9.2	561273	Seal for GEKA coupling, packing unit 10 pieces
9.3	561222	Elbow, 1/2", internal/external thread
10.1	561115	Dosing component, 35 pitch (within scope of supp.)
	561126	Dosing component, 25 pitch
10.2	561121	Conveyor screw without dosing component, scope of supp.
	561121/002	Conveyor screw without dosing component (optimum discharge)
11	561021	Concrete mixing shaft
11.2	561113	Metal bearing bush
12	560019	Pedestal bearing, compl.
12.1	561244	Ball bearing UC 204
12.2	560082	Cover disk
12.3	560083	Rubber seal
13	562124	Jack ring, screwable
14	560072	Solid rubber wheel, 200mm dia. (until 12/01)
14	549152	Solid rubber wheel, 260mm dia. (from 01/02)
15	561116	Covering hood
17	561109	Drive shaft, compl.
17.2	561289	Rubber sealing disk
17.3	600031	Deep groove ball bearing 6005
17.4	600030	Deep groove ball bearing 6005 RSR
17.5	561258	Drive shaft, 25mm dia.
17.5.1	561125	Spiral dowel pin DIN7344
17.6	561259	Circlip 25 x 1.2
17.7	561290	Sealing flange
18	**For water fitting, refer to pages 18-19**	
19	561112	Protective grid with bag opener

Supplied by :- Markham (Sheffield) Ltd - Tel:- +44 (0)1909 730861 - www.markham-sheffield.co.uk

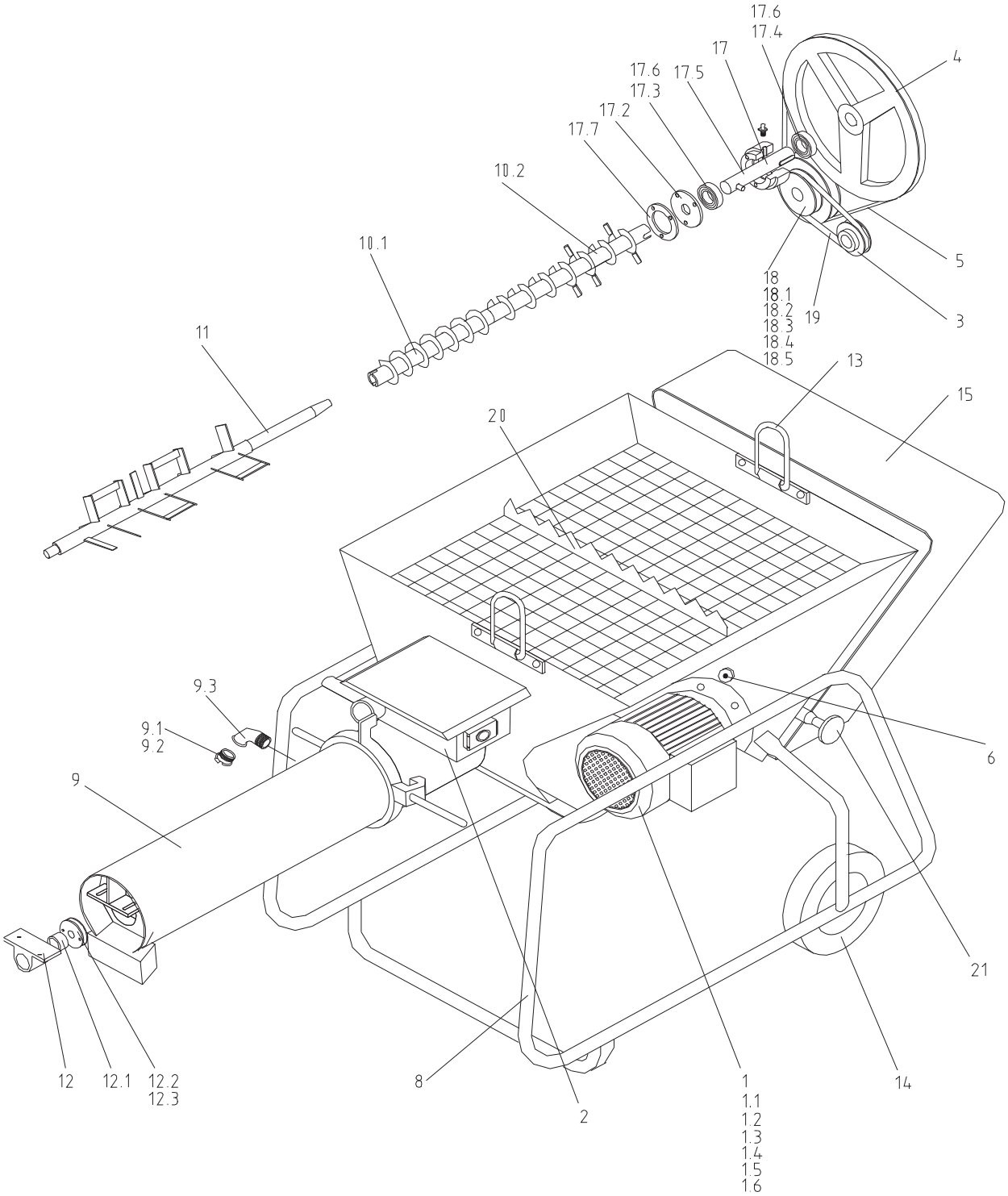

Supplied by :- Markham (Sheffield) Ltd - Tel:- +44 (0)1909 730861 - www.markham-sheffield.co.uk

D20-II-BM-AM 230V 50Hz 1ph (from 01/1999)

Item	Ordering No.	Description
0	**562125**	**D20-II-BM-AM 230V 50Hz 1ph**
1	561003	Electric motor, 2.2kW, 230V 50Hz
1.1	561296	Starting capacitor, 100µF
1.2	561297	Starting capacitor, 150µF
	Important:	**Install both capacitors in the terminal box.**
1.3	561294	Control capacitor, 25µF (2 x)
	Important:	**Capacitor must be installed twice on motor.**
1.4	603093/001	current relay 200V (grey), for type LS 90 PR
1.4	561924	Centrifugal switch (for LS 90 PC model)
1.5	561028	Fan guard
1.6	561029	Fan blade
1		Electric motor, 2.2kW, 230V 50Hz
1.1	561035	Starting capacitor, 160µF
1.3	561036	Control capacitor, 31.5µF
1.4	561037	Centrifugal switch
2	562106	Switch K3000, 230V 50-60Hz, single-phase
	For switch spare parts, refer to pages 14-15	
3	561006	V-belt pulley, aluminium, 63mm dia.
4	561008	V-belt pulley, aluminium, 315mm dia.
5	561030	V-belt, 9.5 x 1175mm
6	562123	Clamping eccentric
8	562113	tubular frame rack (until 12/01)
	562150	tubular frame rack (**from 01/02)**
9	562131/001	Concrete mixing pipe compl.
9.1	561263	GEKA coupling, 1/2", external thread
9.2	561273	Seal for GEKA coupling, packing unit 10 pieces
9.3	561222	Elbow, 1/2", internal/external thread
10.1	561115	Dosing component, 35 pitch ,within scope of supplies
	561126	Dosing component, 25 pitch
10.2	561121	Conveyor screw without dosing component, scope of supply
	561121/002	Conveyor screw without dosing component (optimum discharge)
11	561021	Concrete mixing shaft
11.2	561113	Metal bearing bush
12	560019	Pedestal bearing, compl.
12.1	561244	Ball bearing UC 204
12.2	560082	Cover disk
12.3	560083	Rubber seal
13	562124	Jack ring, screwable
14	560072	Solid rubber wheel, 200mm dia. (until 12/01)
14	549152	Solid rubber wheel, 260mm dia. (from 01/02)
15	561116	Covering hood

Supplied by :- Markham (Sheffield) Ltd - Tel:- +44 (0)1909 730861 - www.markham-sheffield.co.uk

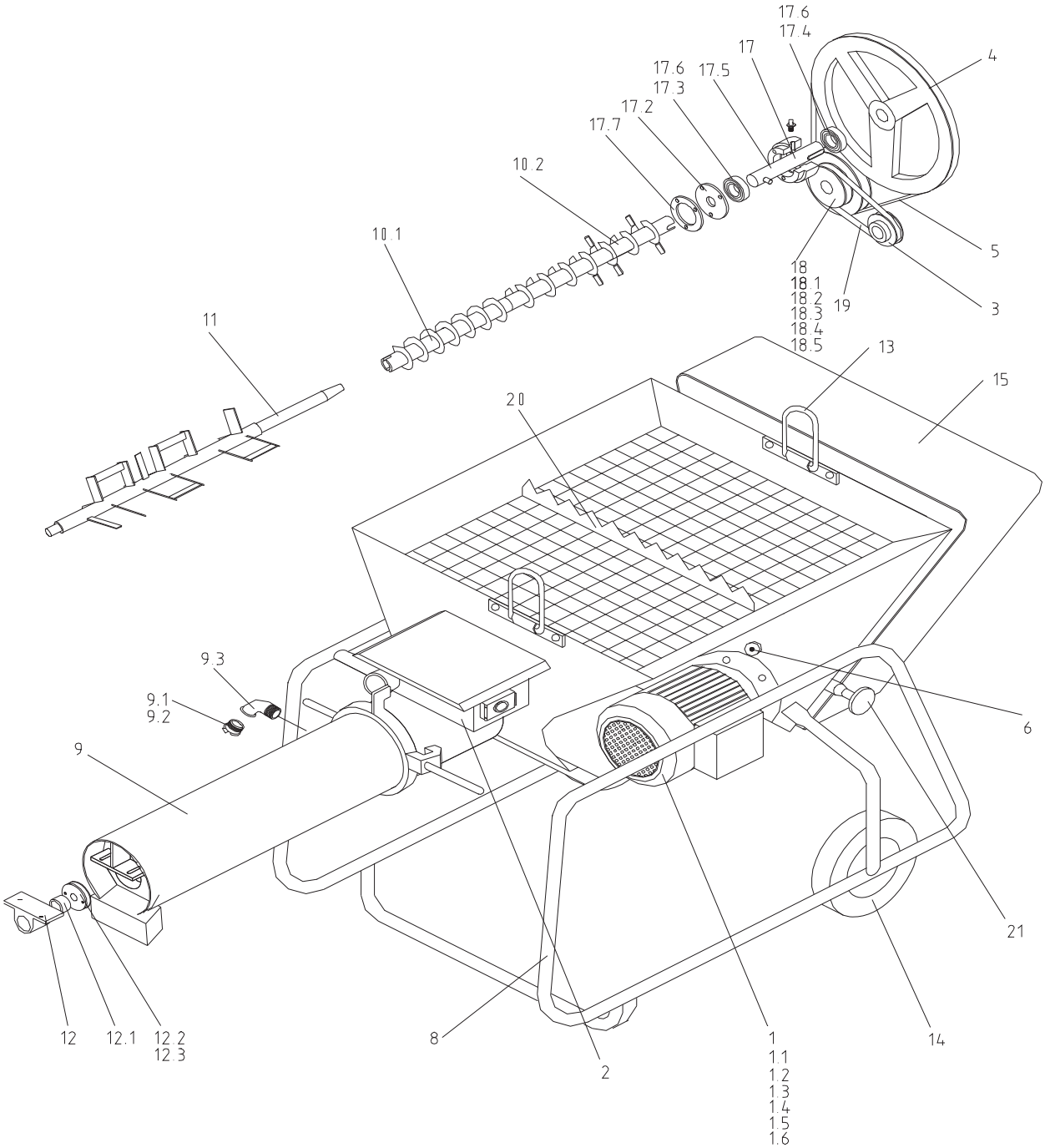

Supplied by :- Markham (Sheffield) Ltd - Tel:- +44 (0)1909 730861 - www.markham-sheffield.co.uk

D20-II-BM-AM 230V 50Hz 1ph (from 01/1999)

Item	Ordering No.	Description
17	561109	Drive shaft, compl.
17.2	561289	Rubber sealing disk
17.3	600031	Bearing 6005
17.4	600030	Bearing 6005 RSR
17.5	561258	Drive shaft, 25mm dia.
17.6	561259	Circlip 25 x 1.2
17.7	561290	Sealing flange
18	561730	Intermediate drive assy., compl.
18.1	561731	Cone pulley
18.2	561733	Shaft for cone pulley
18.3	561732	Bearing, DIN3760, 6004 2RS
18.4	561738	Clamping screw
18.5	561739	Eye bolt, M10x30
19	561737	V-belt, 9.5 x 512 long
20	561112	Protective grid with bag opener
21	**For water fitting, refer to pages 18-19**	

Supplied by :- Markham (Sheffield) Ltd - Tel:- +44 (0)1909 730861 - www.markham-sheffield.co.uk

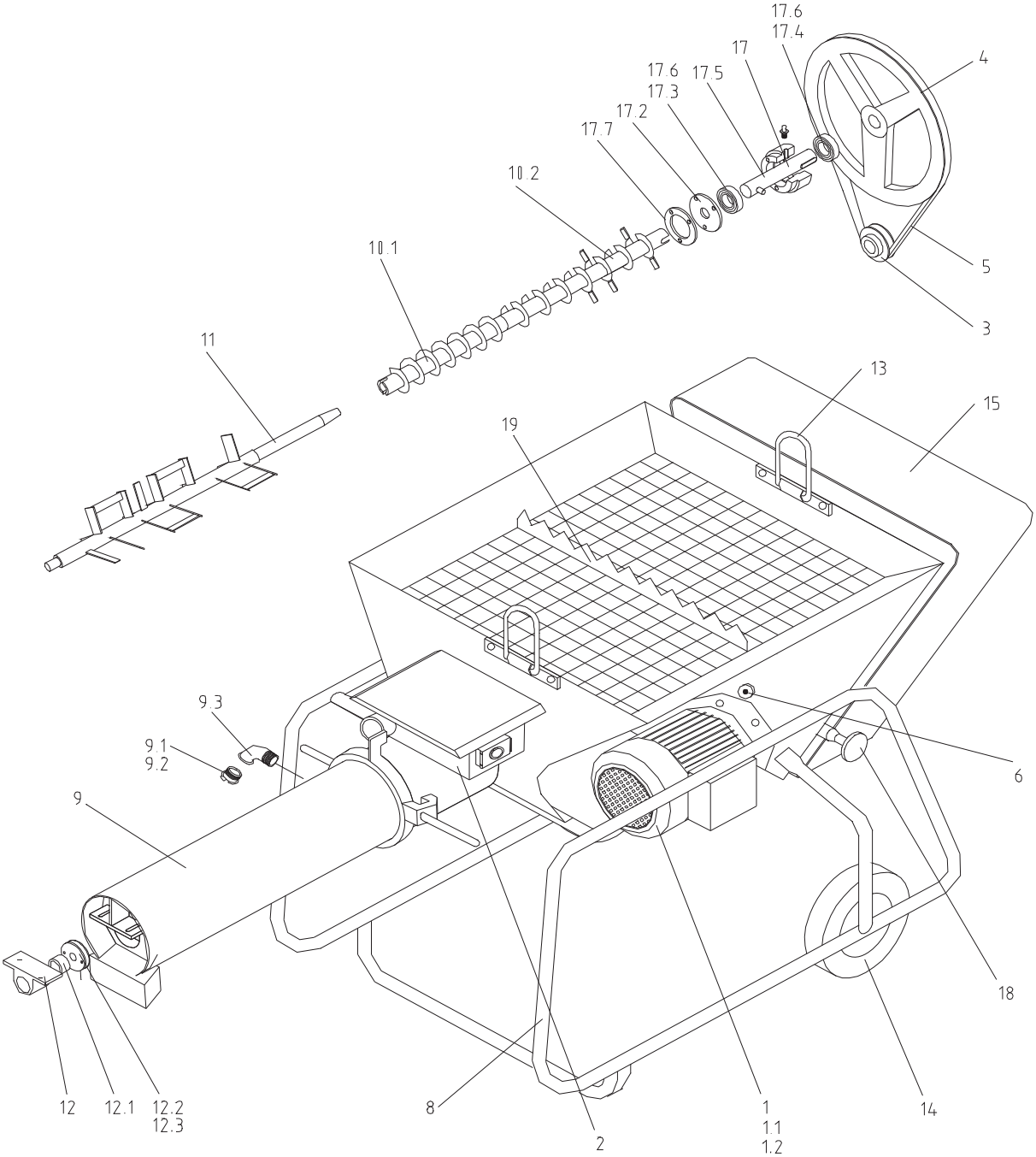

Supplied by :- Markham (Sheffield) Ltd - Tel:- +44 (0)1909 730861 - www.markham-sheffield.co.uk

D20-II-BM 400V 50Hz 3ph (ab 01/1999)

Item	Ordering No.	Description
0	**562135**	**D20-II-BM 400V 50Hz 3ph**
1	561018	Electric motor, 2.2kW, 400V
1.1	561028/001	Fan guard
1.2	561029	Fan blade
2	562109	Switch K3000, 400V 50Hz three-phase
	562108/001	Switch K3000, 230V 50-60Hz single-phase
	For switch spare parts, refer to pages 14-15	
3	561006	V-belt pulley, aluminium, 63mm dia.
4	561008	V-belt pulley, aluminium, 315mm dia.
5	561030	V-belt, 9.5 x 1175mm
6	562123	Clamping eccentric (until 12/01)
8	562150	tubular frame rack (from 01/02)
9	562131/001	concrete mixing pipe compl.
9.1	561263	GEKA coupling, 1/2", external thread
9.2	561273	Seal for GEKA coupling, packing unit 10 pieces
9.3	561222	Elbow, 1/2", internal/external thread
10.1	561115	Dosing component, 35 pitch (within scope of supp.)
	561126	Dosing component, 25 pitch
10.2	561121	Conveyor screw without dosing component (optimum discharge), scope of supplies
	561121	Conveyor screw without dosing component
11	561021	Concrete mixing shaft (for concrete mixing pipe with pedestal bearing)
12	560019	Pedestal bearing, compl.
12.1	561244	Ball bearing UC 204, maintenance-free
12.2	560082	Cover disk
12.3	560083	Rubber seal
13	562124	Jack ring, screwable
14	560072	Solid rubber wheel, 200mm dia. (until 12/01)
14	549152	Solid rubber wheel, 260mm dia. (from 01/02)
15	561116	Covering hood
17	561109	Drive shaft, compl.
17.2	561289	Rubber sealing disk
17.3	600031	Deep groove ball bearing 6005
17.4	600030	Deep groove ball bearing 6005 RSR
17.5	561258	Drive shaft, 25mm dia.
17.6	561259	Circlip 25 x 1.2
17.7	561290	Sealing flange
18	**For water fitting, refer to pages 18-19**	
19	561112	Protective grid with bag opener

Supplied by :- Markham (Sheffield) Ltd - Tel:- +44 (0)1909 730861 - www.markham-sheffield.co.uk

400 V

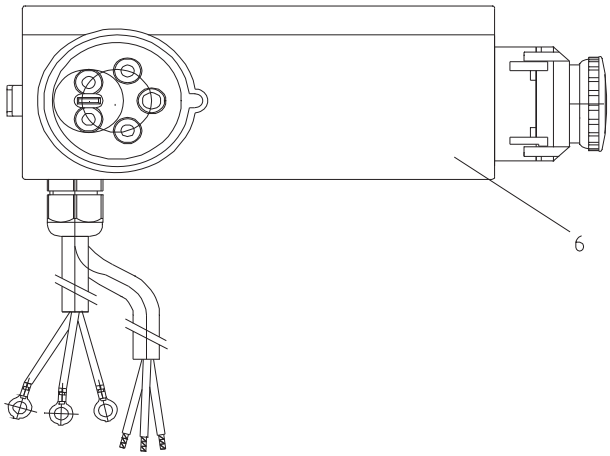

230 V

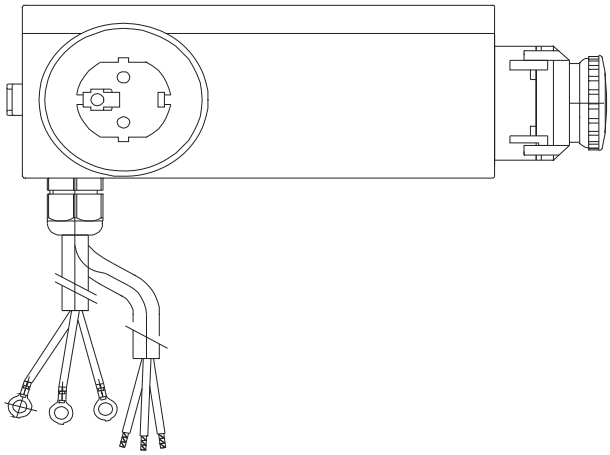

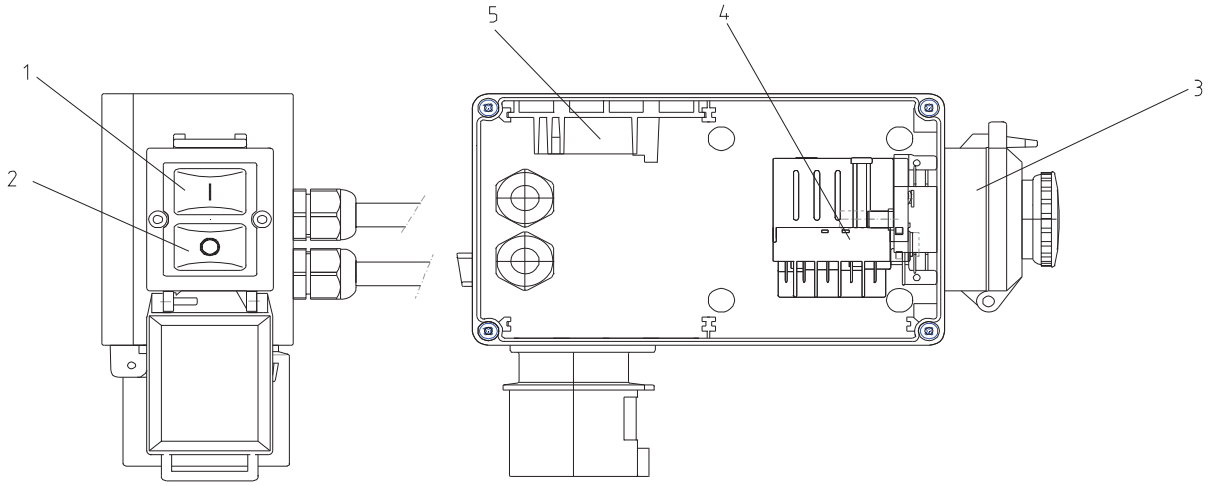

Supplied by :- Markham (Sheffield) Ltd - Tel:- +44 (0)1909 730861 - www.markham-sheffield.co.uk

Item	Ordering No.	Description

Switch K3000, 230V/Single-Phase

0	**562106**	**Switch K3000, 230V 50-60Hz, single-phase**
0	**562108**	**Switch K3000, 230V, single-phase with WP**
0	**562108/001**	**Switch K3000, 230V 50-60Hz, single-phase 16A 3pole 6h, with water pump**
1	562126	ON push-button (green) with spring and insert
2	562127	OFF push-button (red) with spring and insert
3	562128	Push-button cover
not shown	562145	Contactor, 5.5kW (from 11/00 on)
not shown	562146	Auxiliary contactor, (from 11/00 on)
4	562129	Switching contactor 230/240V, 50-60Hz (until 10/00)
4	562137	Electrical On-Element (from 11/2000)
5	562136	Bimetallic release, 13.5A/single-pole
6	562143	Empty housing with plug insert

Switch K3000, 400V/Three-Phase

0	**562109**	**Switch K3000, 400V 50Hz/three-phase**
0	**562111**	**Switch K3000, 400V 50Hz/three-phase with water pump**
1	562126	ON push-button (green) with spring and insert
2	562127	OFF push-button (red) with spring and insert
3	562128	Push-button cover
4	562139	Contactor, 400V, 50Hz
5	562138	Bimetall 6A/3pin
6	562144	Empty housing with plug insert

Supplied by :- Markham (Sheffield) Ltd - Tel:- +44 (0)1909 730861 - www.markham-sheffield.co.uk

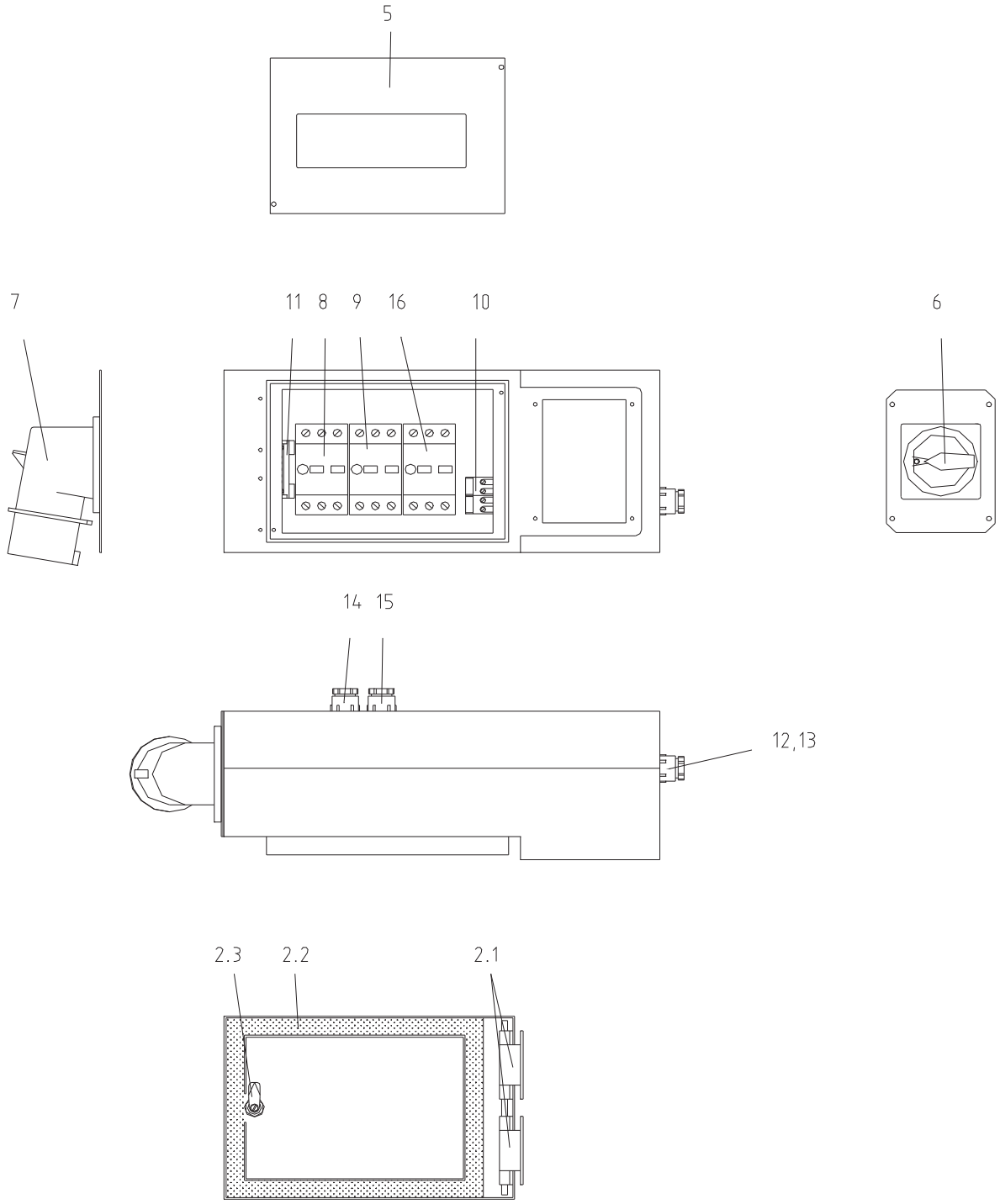

Supplied by :- Markham (Sheffield) Ltd - Tel:- +44 (0)1909 730861 - www.markham-sheffield.co.uk

Electric Control System, 400V

Item	Ordering No.	Description
0	**561313**	**Electric control system, 400V (n.l.a.)**
2.1	554320	Door hinge
2.2	530060	Microcellular rubber, 15 x 5 (per metre)
2.3	561539	Lock
5	561764	PVC cover plate
6	601737	Main switch with undervoltage circuit breaker
7	570021	CEE-plug 16A 5pole 6h as phase converter
7.1	570034	Screwdriver for phase changer
8	561007	Motor protection switch 4-6,3A
9	573245	Motor protection switch 0,4-0,6A
10	561015	Transformer, 400/42V, 50Hz
11	554101	Earthed conductor terminal
12	545157	Screwing, PG11
13	545158	Lock nut, PG11
14	600155	Screwing, PG13
15	545158	Lock nut, PG13
0	**562013**	**Electric control system, 400V, with water pump (n.l.a.)**
2-15		See above
16	601765	Motor protection switch, 1-1.6A (water pump only)

Supplied by :- Markham (Sheffield) Ltd - Tel:- +44 (0)1909 730861 - www.markham-sheffield.co.uk

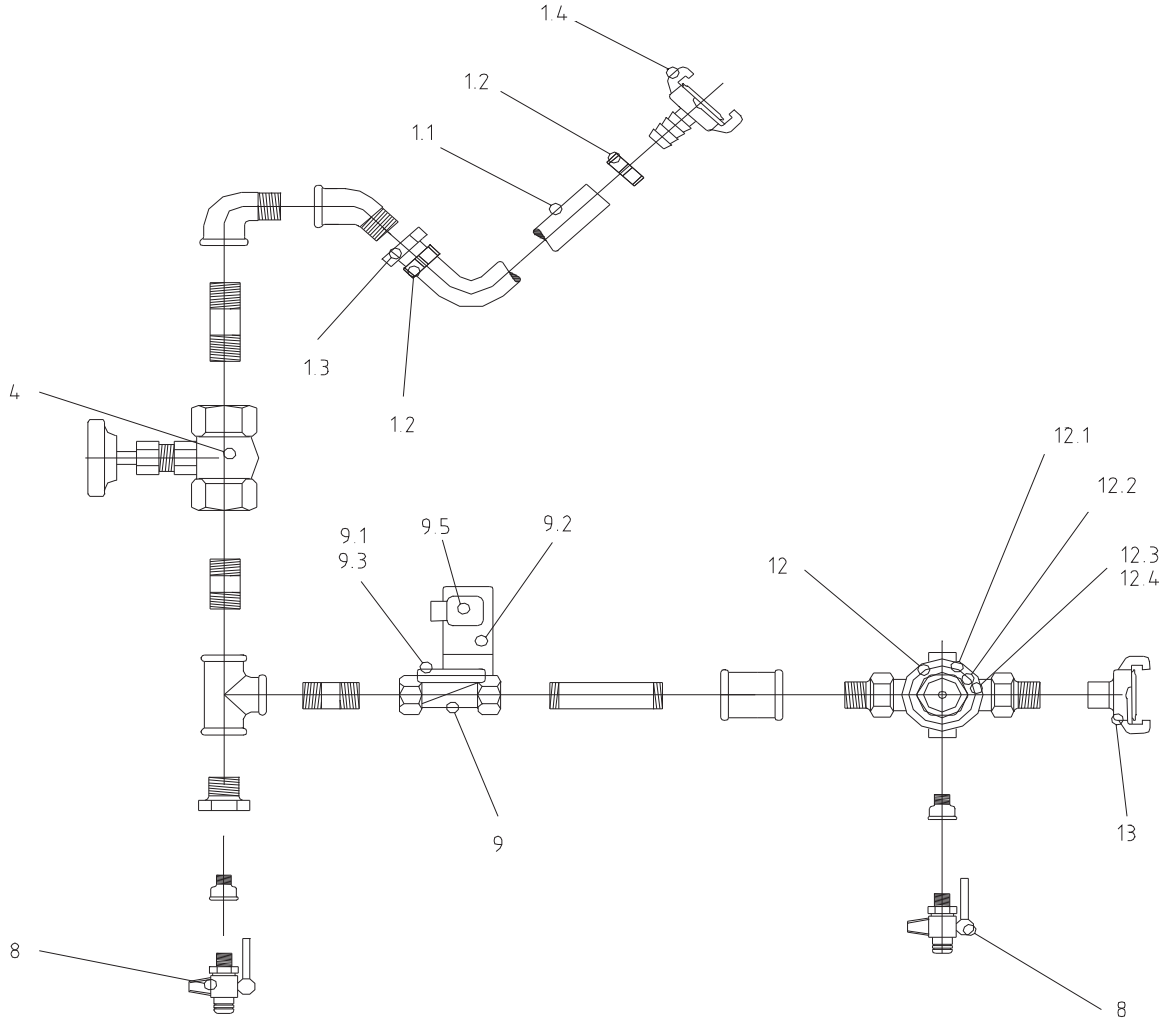

Supplied by :- Markham (Sheffield) Ltd - Tel:- +44 (0)1909 730861 - www.markham-sheffield.co.uk

Water Fitting 230V/400V

Item	Ordering No.	Description
1	561236	Water hose 1/2"x1.25m compl.
1.1	530052	Water hose 1/2" cut goods
1.2	561228	Hose mountings 16-25 1/2"
1.3	561224	Hose clip 1/2" internal thread with 1/2" sleeve nut
1.4	561232	GEKA coupling 1/2" with nozzle
4	561218	Fine regulating valve 1/2"
8	561216	Discharge valve 1/4" outside thread
9	561208	Solenoid valve 1/2", 230V (230 V with Types I + II)
9.1	561209/001	Membrane for 1/2" solenoid valve
9.2	561211	Coil for the solenoid valve 1/2", 230VI
9.3	561215	Cover for the solenoid valve 1/2"
9.4	561988	Wear part set (for MK 8000)
9.5	601057	Catch box 4-pole
9	574010	Solenoid valve 1/2", 42V (at 400 V)
9.1	561209/001	Membrane for 1/2" solenoid valve
9.2	561212	Coil for the solenoid valve 42V
9.3	561215	Cover for the solenoid valve 1/2"
9.4	561988	Wear part set (for MK 8000)
9.5	601057	Catch box 4-pole
9	562112	Solenoid valve 1/2", 400V (400 V with Type II)
9.1	561209/001	Membrane for 1/2" solenoid valve
9.2	562133	Coil for the solenoid valve 400V
9.3	561215	Cover for the solenoid valve 1/2"
9.4	561988	Wear part set (for MK 8000)
9.5	562142	Device socket 4-pole / 400V
12	561202/002	Pressure reducer 1/2"
12.1	561203	Membrane for the pressure reducer 1/2"
12.2	561205	Double sieve for the pressure reducer 1/2"
12.3	561207	Sieve chamber for the pressure reducer 1/2"
12.4	561207/001	O-Ring for the sieve chamber 1/2" and 3/4"
12.5	561213	Spanner for the sieve chamber
13	561200	GEKA coupling 1/2" internal thread
13.1	561273	Seal for GEKA coupling, packing unit 10 pieces

Supplied by :- Markham (Sheffield) Ltd - Tel:- +44 (0)1909 730861 - www.markham-sheffield.co.uk

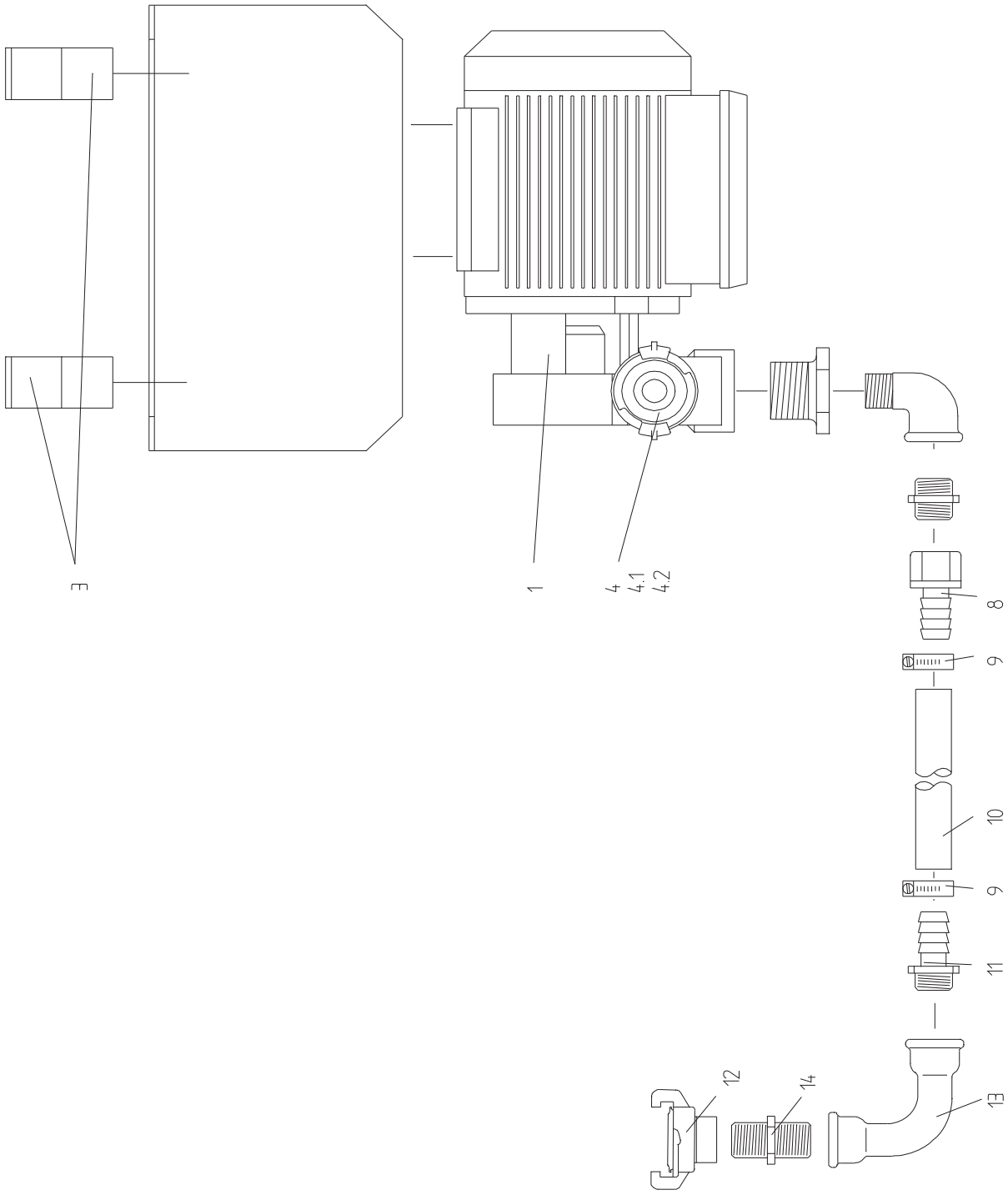

Supplied by :- Markham (Sheffield) Ltd - Tel:- +44 (0)1909 730861 - www.markham-sheffield.co.uk

Water Pumps

Item	Ordering No.	Description
0	**562020/001**	**Water pump T 61E, 400V 1ph compl. including mounting parts**
1	545145	Water pump T61E 400V 50Hz 3ph
0	**562019/001**	**Water pump TM 61E, 230V 1ph compl. including mounting parts**
1	562021	Water pump TM61E 230V 50Hz 1ph
3	580012	Tube bracket size 4
3.1	580017	Cover plate from the tube bracket 3/4"
4	551023	GEKA coupling 1" external thread
4.1	561273	Seal for GEKA coupling, packing unit 10 pieces
4.2	561563	Conical sieve insert
8	561224	Hose clip 1/2" internal thread with 1/2" sleeve nut
9	561230	Jurid terminal 1/2"
10	530052	Water hose 1/2" cut goods
11	601729	Hose clip 1/2"
12	561200	GEKA coupling 1/2" internal thread
13	545101	Bellow 1/2" internal thread
14	545102	Double nipple 1/2" external thread , Brass
14.1	561210	Double nipple 1/2" x 30 long , galvanized

Water pump PQ 60 compl. 400V

0		**Water pump PQ 60, 400V, compl., incl. fastening**
1	574122	Water pump PQ60 400V 50Hz (n.l.a.)
0		**Water pump PQ 60, 230V, 1ph, compl., incl. Fastening**
1	562021/001	Water pump PQM 60, 230V 1ph (n.l.a.)
3	580012	Tube bracket size 4
3.1	580017	Cover plate from the tube bracket 3/4"
4	551023	GEKA coupling 1" external thread
4.1	561273	Seal for GEKA coupling, packing unit 10 pieces
4.2	561563	Conical sieve insert
8	561224	Hose clip 1/2" internal thread with 1/2" sleeve nut
9	561230	Jurid terminal 1/2"
10	530052	Water hose 1/2" cut goods
11	601729	Hose clip 1/2"
12	561200	GEKA coupling 1/2" internal thread
13	545101	Bellow 1/2" internal thread
14	561210	Double nipple 1/2" x 30 long , galvanized

Supplied by :- Markham (Sheffield) Ltd - Tel:- +44 (0)1909 730861 - www.markham-sheffield.co.uk

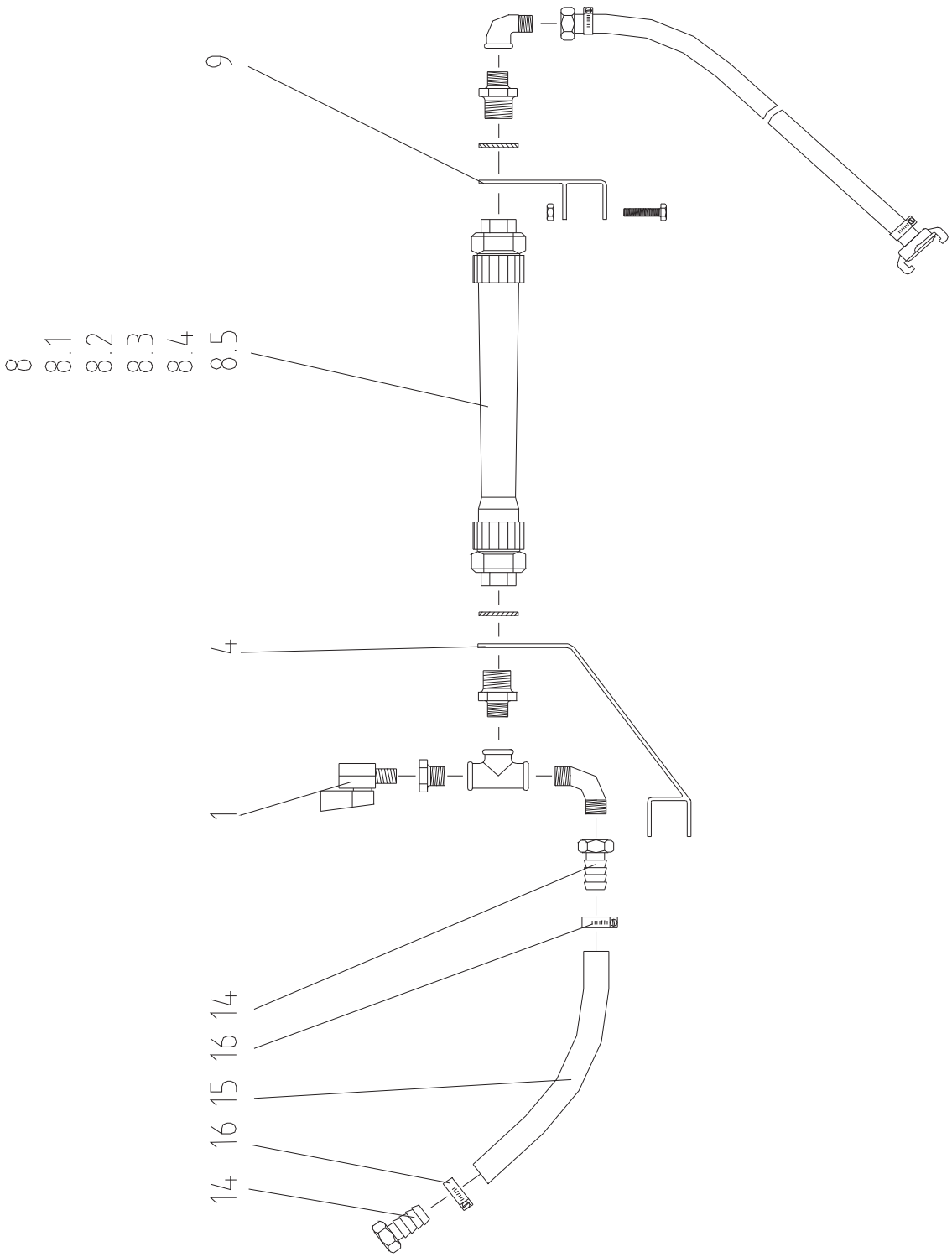

Supplied by :- Markham (Sheffield) Ltd - Tel:- +44 (0)1909 730861 - www.markham-sheffield.co.uk

Flow Meter D20

Item	Ordering No.	Description
0	**561237**	**Flow meter D20 compl.**
1	561216	Discharge valve 1/4" outside thread
4	561269	Support (long)
8	561268	Flow meter 160-1600 l compl.
8.1	561238	Measurement tube 160-1600 l/h
8.2	561221	O-Ring 28 x 3.5
8.3	561219	Sealing O-Ring 30 x 3.5
8.4	561265	PVC screw connection
8.5	561266	Measuring cone for the flow meter
9	561270	Support (short)
14	561224	Hose clip 1/2" internal thread with 1/2" sleeve nut
15	530052	Water hose 1/2" cut goods
16	561230	Jurid terminal 1/2"

Supplied by :- Markham (Sheffield) Ltd - Tel:- +44 (0)1909 730861 - www.markham-sheffield.co.uk