Operating Instructions

Continuous-flow mixer calypso D50

392599 – 02/2004

Technical development:
The manufacturer reserves the right to adapt technical data without notification to reflect the current state of technical development. For information regarding the current status, alterations or additions to these operating instructions, please contact m-tec mathis technik gmbh.

D50 – 392599 – 02/04

Dear Customer,

This machine represents the current technical state of the art and complies fully with generally applicable standards and EC directives. This is indicated by the CE mark and the enclosed declaration of conformity, which can be found in the pocket on the machine.

Before using the machine for the first time, please remove the declaration of conformity from the pocket and store it in a safe place.

Before starting the machine for the first time, fill in the information required on this page. This is the easiest way to familiarise yourself with the characteristics of the machine, and the important data can be consulted at any time without having to read them off the machine plate. Please have this information to hand if you wish to consult us about this machine. The data you require can be found on the machine plate.

Type _____

Machine no. _____

Year of manufacture _____

Connections _____

Rated current (total) _____

Date of commissioning _____

Application _____

D50 – 392599 – 02/04

1 Safety

The operating instructions always use the term "machine" for the combination of continuous-flow mixer and switch cabinet.

The machine has been designed and built using the latest technology and has left the manufacturer's plant in perfect condition.
However, it may be dangerous to persons and property if used incorrectly, for the wrong purpose, or by untrained personnel.
For this reason all persons concerned with commissioning, operation and maintenance of the machine must read and understand the operating instructions beforehand. This will prevent damage and allow correct working with the machine.

The Operating Instructions must be kept in the pocket provided on the machine so operators can access it at any time.

Modifications to the machine are not authorised. Use only spare parts and lubricants supplied by m-tec mathis technik gmbh.

1.1 Danger symbols

The following symbols are used in the Operating Instructions to draw attention to possible dangers which may occur when using the machine:

This symbol indicates danger for life and limb of persons. These instructions must be observed at all times. Ensure the safety of other persons in the vicinity of the machine and its components.

Warning of dangerous electric voltage.
Careless actions around the switch box or conductive lines involves the danger of electric shock that may result in serious injuries, burns or death.

ATTENTION!

This symbol is used in the Operating Instructions to identify all operations that may cause damage to property or
impair operating efficiency. Follow the instructions closely.

This symbol is used to mark important or additional information on the machine or documentation.

This symbol is used to indicate possible risks to the environment if the instructions are not observed.

1.2 Work safety

When transporting, assembling, dismantling, operating, servicing and cleaning the machine, the applicable national and international safety regulations and legislation must always be observed, even if such regulations and legislation are not explicitly mentioned in these instructions.

In addition, always observe the following instructions:

- The continuous-flow mixer must only be operated when it is correctly installed under a silo.
- The continuous-flow mixer must only be operated when connected with a matching m-tec switch cabinet.
- The machine must be used only for mixing factory premixed dry mortar, such as wall and plaster mortar and insulation mortar.
  Any other use is not approved.
- Use only spare parts and accessories supplied by m-tec mathis technik gmbh. m-tec mathis technik gmbh does not accept liability for any accidents resulting from the use of non-approved spare parts or accessories. Unauthorised conversions and changes to the machine are not permitted.

- The machine can be transported while attached to the silo. Before transport the following actions must be taken:
  - Ensure that all screws and bolts that fasten the continuous-flow mixer to the silo cap are present and tight.
  - Ensure that the continuous-flow mixer is attached to the silo with the mixing pipe pointing upwards.
  - Ensure that the continuous-flow mixer is empty.
  - When using the S40 EC switch cabinet:
  Ensure that all screws and bolts that fasten the switch cabinet to the continuous-flow mixer are present and tight.
  - When using the S40 MR or MRS switch cabinet:
  Detach switch cabinet from the silo frame and secure separately as specified.
- Special version D50 V with extended mixing pipe:
  Before transport the extended mixing pipe must be removed and secured as described in "D50 V – Securing the extended mixing pipe".
  The extended mixing pipe of the D50 V must not be transported without being secured.
- The operating instructions and regulations of the silo must always be observed when transporting and setting up the silo.
- The silo must be set up on an elevated site outside the danger area.
  If this is not possible, the workplaces at the silo must be protected by roofs against falling objects.
- The continuous-flow mixer must be securely fastened to the silo butterfly valve with its integral flange.

- The machine must be checked for operating safety every time before operation and any damage or defects must be ruled out.
  This applies particularly for:
  - the state of electrical wiring, plugs, connectors,
  - the state of water lines and fittings,
  - secure fastening of all attached components.
  If any damage is found, the machine must not be operated until the damage has been professionally repaired.
- The machines must be connected to a construction site panel with e.l.c.b. circuit breakers.
  A 16 A 5-pole 6h plug connector and a connection cable 5 x 2.5 mm^2 in cross section with a 16 A fuse is required.
- When the machine is connected to electric power never reach into the machine, the mixing pipe or the discharge; you will risk serious injury.
- The main switch must be set to “0” and the power cable disconnected before starting troubleshooting or maintenance work. Measures must also be taken to ensure that the machine cannot be connected to the power supply while such work is being carried out.
- Careless actions around the switch box or live wires and cables involves the risk of electric shock that may result in serious injuries, burns or death.

- The main switch must be set to “0” and the power cable disconnected before any actions that require opening the switch cabinet.
  Measures must also be taken to ensure that the machine cannot be connected to the power supply while such work is being carried out.
- All maintenance and repairs at the switch cabinet must be carried out by qualified technicians only.
- The switch cabinet is installed in degree of protection IP 54 and is resistant to the entry of foreign bodies and spray when closed.
  When it is open it must be protected against the entry of water.
- The machine must be protected against hazardous touch voltages by the compulsory operation of an e.l.c.b. circuit breaker in the power supply feed (construction site side).
- If a fault occurs in the switch cabinet as a result of moisture or a technical fault, do not touch the switch cabinet and disconnect the power immediately. The power must not be connected again until it has been tested by a qualified technician and passed as functional.
- The switch cabinet must not be cleaned with compressed air or by water, sand or steam blasting.
- S40 MRS switch cabinet operating with wet mortar sensor: If the machine is switched on with an “On/Off” double push button, the wet mortar sensor control may start it running spontaneously at any time, even if it is not running at the time (standby mode). Indication: the white lamp on the “On/Off” double push button is on.

- The safe operating condition of the machine must be checked at least once a year and as required by a person qualified to conduct such inspections. Qualified persons are those who, through training and experience, have sufficient knowledge in the field of mortar-feeding and mortar-spraying machines and are sufficiently familiar with the relevant legislation regarding work safety, accident prevention, directives and generally accepted technical procedures to enable them to assess the safety of the machine.
- The Troubleshooting Table is not intended to replace the detailed instructions in the appropriate sections of the Operating Instructions. Always observe the safety notes in the relevant sections.
- The D50 V can be protected by a rain cover (art. no. 560129) during transport to prevent the entry of moisture into the dry material pipe.
- The direction of rotation of the motor must be checked before regular operation.
  If the motor rotates in the wrong direction, the mixer and feed shaft will also rotate in the wrong direction. This will transport wet material from the mixing pipe into areas that must remain dry under all circumstances (infeed area and silo).
  The direction of rotation of the motor must therefore be checked before the silo butterfly valve and the water infeed are opened.
- The infeed water pressure must be a minimum of 3 bar to ensure that the mortar is of even consistency.
- The maximum operating pressure of the water pump (optional) must not exceed 10 bar.

ATTENTION!

- Pauses in work must be limited. All pauses must be shorter than the setting time of the current material. Solid material in the mixing pipe will cause difficult starting with the motor and may damage the continuous-flow mixer.
- In freezing weather the machine may be damaged by water freezing in components that transport water. All water-carrying parts must be completely drained before extended downtime at low temperatures.
- Do not process semiliquid material but drain it into a bucket and dispose of as required.
  The semiliquid material and cleaning water must not be disposed of on the ground.
- The connection between the mixing pipe and the infeed shaft must be clean, dry and free from grease. Water must not enter the infeed pipe.
- Gear oil must not be added between oil changes. Otherwise the gearbox may be overfilled, causing it to overheat.
  Different grades of oil must not be mixed. The different grades of oil may separate and destroy the gearbox.
- Dispose of mortar residue correctly as building waste!
- The applicable environmental protection requirements must be observed when disposing of oil, grease or cleaning agents!

1.3 Personal safety equipment

- The contractor must supply suitable personal noise-protection equipment if the rated noise level at the work site exceeds 85 dB (A). Personnel must use this equipment if the rated noise level exceeds 90 dB (A).

2 Description of the machine

The operating instructions always use the term "machine" for the combination of continuous-flow mixer and switch cabinet.

The continuous-flow mixer comes in the following models:

- D50 Type II
- D50 V Type II with extended mixing pipe.

- D50 Type IV
- D50 V Type IV with extended mixing pipe.

D50 Type IV, unlike the previous type, has the following equipment:

- sump principle
- mixing pipe removable with tapered closure
- electrical safety equipment

The continuous-flow mixer is used with one of the following switch cabinets, depending on the requirements:

- S40 EC
- S40 MR or
- S40 MRS

2.1 Designated use

The continuous-flow mixer must not be operated unless it is correctly installed under a silo.

The continuous-flow mixer must not be operated unless it is connected with a matching m-tec switch cabinet.

The machine must be used only for mixing factory premixed dry mortar, such as wall and plaster mortar and insulation mortar.
Any other use is not approved.

2.2 Functioning

The continuous-flow mixer is installed under a silo that feeds the dry material into the mixer's infeed pipe.
A feed auger transports the material from the infeed pipe to the mixing pipe.
There the material is mixed with water and transported to the discharge.

Functions of the S40 EC, MR and MRS switch cabinets
The switch cabinet is connected to the site panel with an e.l.c.b. circuit-breaker. It supplies power for the continuous-flow mixer and a vibrator (on the silo).
The machine can be switched on and off with a main switch.

Additional function S40 MR and MRS switch cabinet
The S40 MR and MRS switch cabinets also have the option of setting the run time of the continuous-flow mixer. The machine switches off automatically when the specified run time expires.

Additional function with S40 MRS switch cabinet
The continuous-flow mixer can be switched on and off automatically with a wet mortar sensor. The wet mortar sensor is in the processing device, e.g. in a material trough of a pump, which is under the continuous-flow mixer discharge.
When the material trough is empty, the wet mortar sensor sends an "empty" message to the continuous-flow mixer and it starts mixing automatically.
If the material trough is full, the wet mortar sensor sends a "full" message to the continuous-flow mixer. The mixing process is automatically stopped and the machine switches to standby mode.

2.3 Machine diagram

Type II

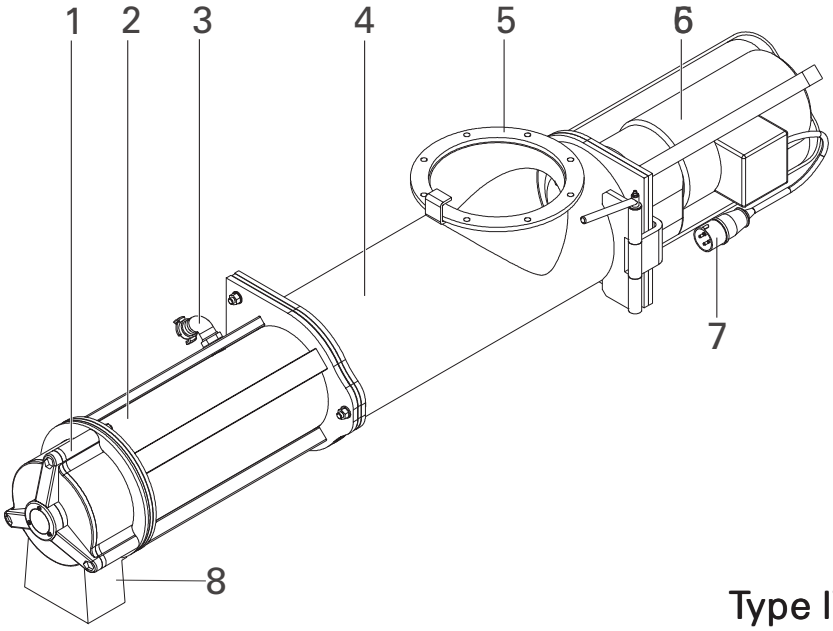

Type IV

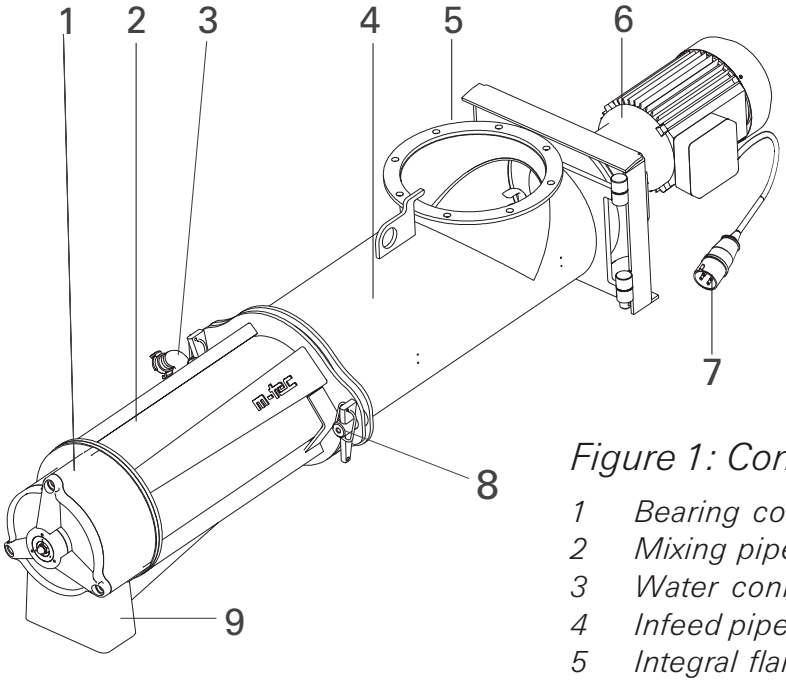

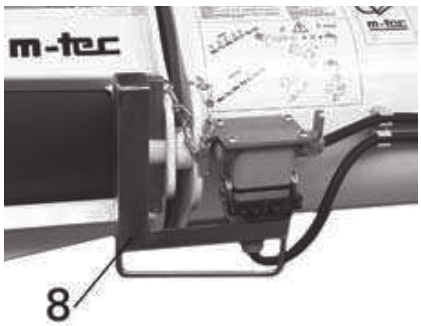

Figure 1: Continuous-flow mixer

1 *Bearing cover*
2 *Mixing pipe*
3 *Water connection*
4 *Infeed pipe*
5 *Integral flange for mounting on the silo butterfly valve*
6 *Mixer motor*
7 *Connector cable for mixer motor*
8 *Wedge lock without/with safety device*
9 *Discharge*

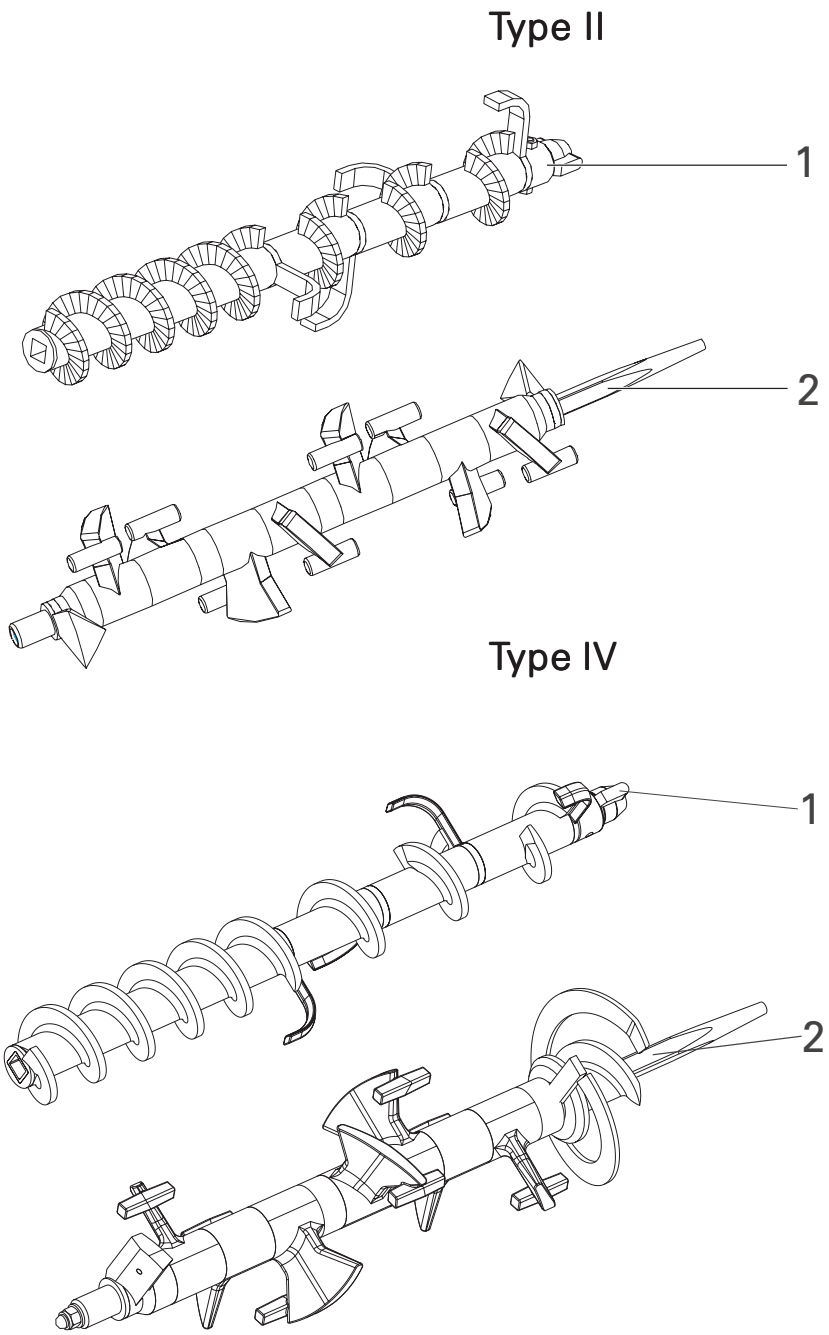

Figure 2: Continuous-flow mixer shafts

1 Infeed shaft
2 Mixer shaft

2.4 Operating and control elements

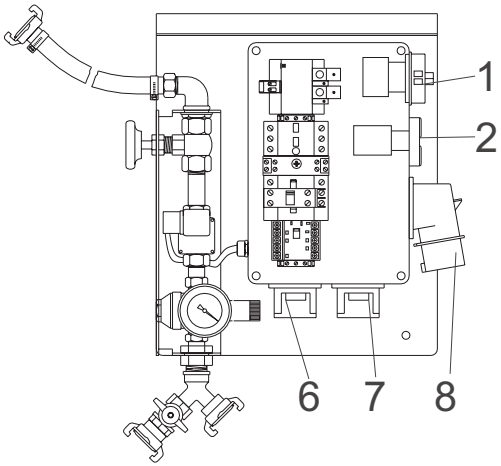

Figure 3: S40 EC switch cabinet

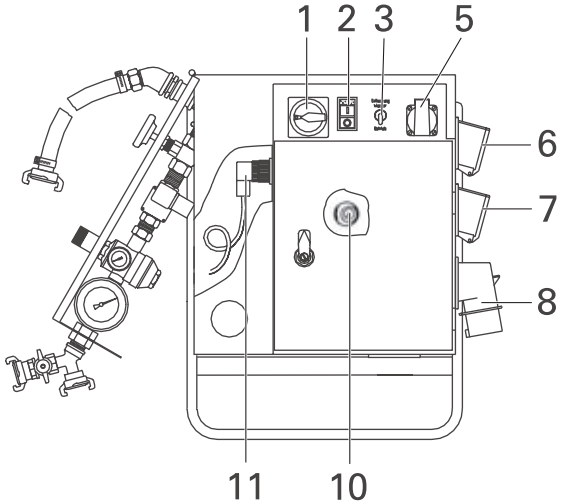

Figure 4: S40 MR switch cabinet

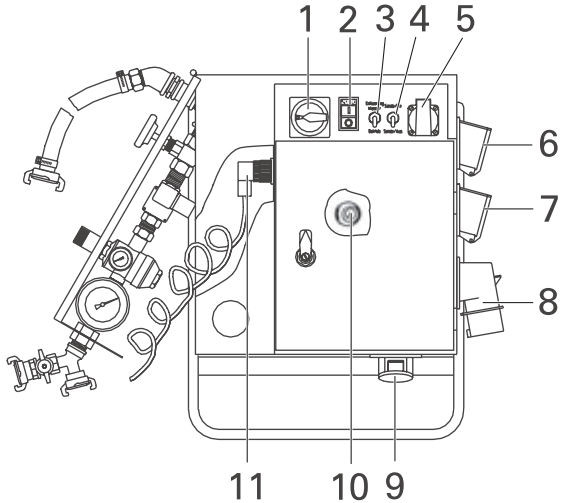

Figure 5: S40 MRS switch cabinet

		S40 switch cabinet		
Item no.	**Name**	**EC**	**MR**	**MRS**
1	Main switch	x	x	x
2	Double push button	x	x	x
3	“Operate/Clean” rocker switch	-	x	x
4	“Operate with/without sensor” rocker switch	-	-	x
5	Earthed power socket	-	x	x
6	“Continuous-flow mixer” connection	x	x	x
7	“Vibrator” connection	x	x	x
8	Mains power connection	x	x	x
9	“Wet mortar sensor” connection	-	-	x
10	Mixer runtime” time relay	-	x	x
11	“Heater coil” connection	-	x	x

Main switch – Figure 3/4/5 Item 1

In position “0” the machine is not powered.

In position “1” the machine is ready for operation.

”On/Off” push button – Figure 3/4/5 Item 2

The machine can be switched on and off with the “On/Off” switch. If the machine is ready for operation and switched on with the “On/Off” switch, the white indicator light on the “On/Off” push button comes on.

”Mixer runtime” time relay – Figure 4/5 Item 10 (S40 MR/MRS only)

The run time of the mixer can be set with a time relay. When the specified mixer run time expires the machine switches off automatically, but remains ready for operation.

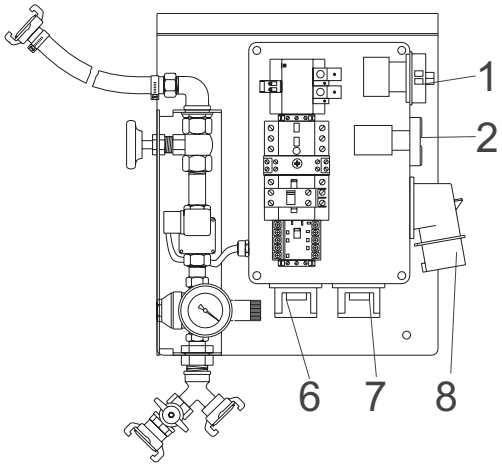

Figure 3: S40 EC switch cabinet

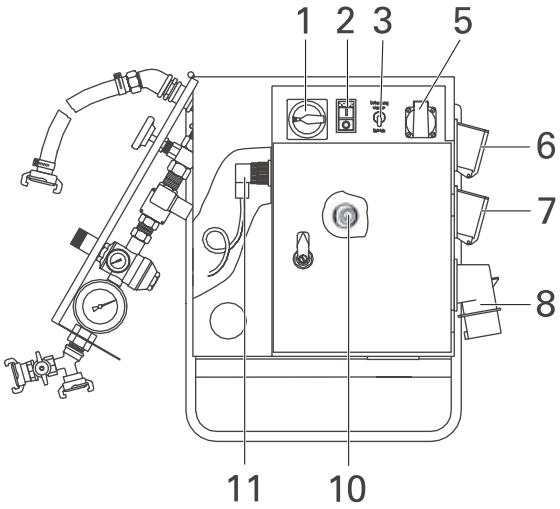

Figure 4: S40 MR switch cabinet

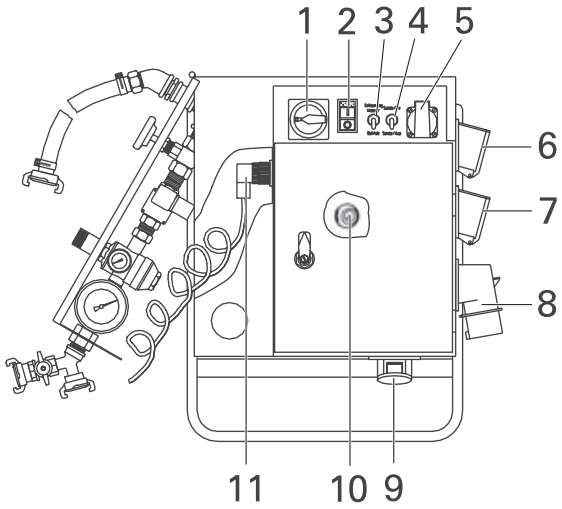

Figure 5: S40 MRS switch cabinet

Item no.	Name	EC	MR	MRS
1	Main switch	x	x	x
2	Double push button	x	x	x
3	“Operate/Clean” rocker switch	-	x	x
4	“Operate with/without sensor” rocker switch	-	-	x
5	Earthed power socket	-	x	x
6	“Continuous-flow mixer” connection	x	x	x
7	“Vibrator” connection	x	x	x
8	Mains power connection	x	x	x
9	“Wet mortar sensor” connection	-	-	x
10	Mixer runtime” time relay	-	x	x
11	“Heater coil” connection	-	x	x

"Operation with/without sensor" rocker switch – Figure 4 Item 4 (S40 MRS only)

The continuous-flow mixer can be switched on and off automatically with a wet mortar sensor. The wet mortar sensor can be in a material trough of a pump, which is under the continuous-flow mixer discharge. When the material trough is empty, the wet mortar sensor sends an "empty" message to the continuous-flow mixer and it starts mixing automatically.
If the material trough is full, the wet mortar sensor sends a "full" message to the continuous-flow mixer. The mixing process is automatically stopped and the machine switches to standby mode.
The rocker switch must be set to "with sensor" for operation with the wet mortar sensor. If the machine is operated without the wet mortar sensor, the rocker switch must be set to "without sensor".

If the machine is switched on with the dual "On/Off" push button, the wet mortar sensor control may start it running spontaneously at any time, even if it is not running at the time (standby mode). Indication: the white lamp on the "On/Off" double push button is on.

"Operate/Clean" rocker switch – Figure 4/5 Item 3 (S40 MR/MRS only)

The rocker switch must be set to "Operate" before normal operation. This ensures that water is always fed when the mixer motor is running.
If the rocker switch is set to "Clean", the mixer motor does not run but water is still fed.

If the water fitting is empty when work is finished, the rocker switch must be set to "Clean", after the water feed has been stopped.

2.5 Water fittings

ATTENTION!

The machine requires a constant water pressure of 3 bar.

The maximum operating pressure of the water pump (accessory with the S40 MR switch cabinet, otherwise optional) must not exceed 10 bar.

The machine can be fitted with a water pump to make it independent of pressure variations in the water supply pipe. The water pump increases the infeed water pressure. A pressure restrictor in the water fittings regulates the water pressure to a constant 2 bar at 700 l/h.

The amount of water being fed is adjusted manually at the fine control valve.
The machine can also be fitted with a flowmeter as an optional extra. The flow can be controlled at the flowmeter.

ATTENTION!

In freezing weather the machine may be damaged by water freezing in components that transport water. All water-carrying parts must be completely drained before extended downtime at low temperatures (see chapter on "Winter operation").

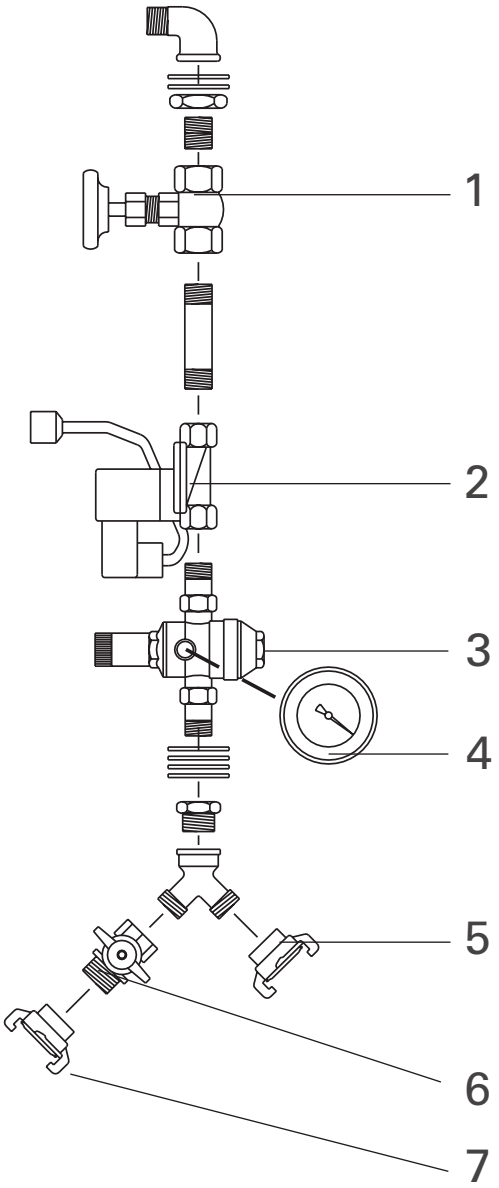

Figure 6a: Water fittings S40 EC switch cabinet

1 *Fine-control valve 1/2"*
2 *Solenoid valve 1/2"*
3 *Pressure reducer 1/2"*
4 *Manometer (set water pressure)*
5 *External water connection GEKA coupling 3/4" IG*
6 *Ball valve*
7 *Supplementary water outlet GEKA coupling 3/4" IG*

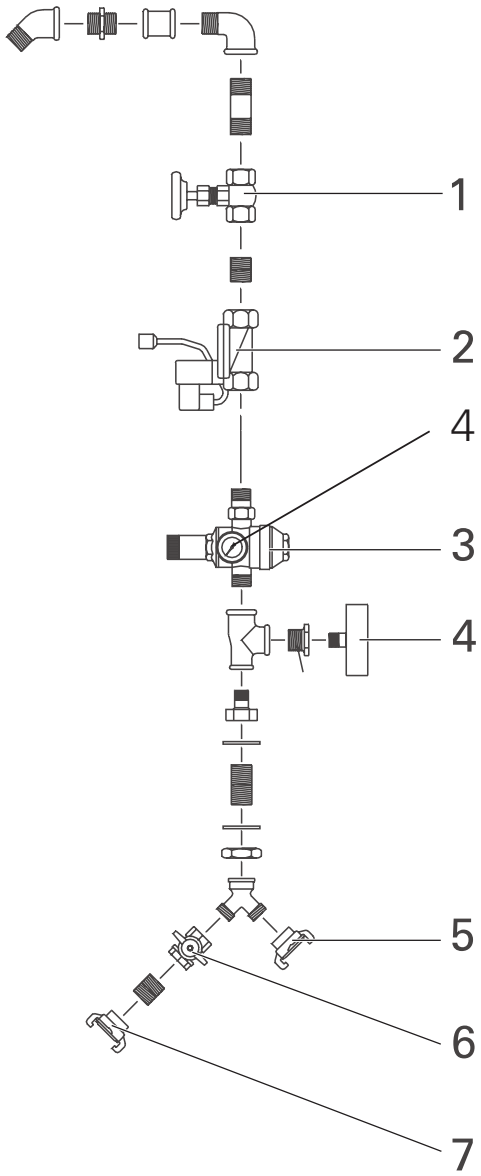

Figure 6: Water fittings on S40 MR/MRS switch cabinet

1 *Fine-control valve 1/2"*
2 *Solenoid valve 1/2"*
3 *Pressure reducer 1/2"*
4 *Manometer (set water pressure)*
5 *External water connection GEKA coupling 3/4" IG*
6 *Ball valve*
7 *Supplementary water outlet GEKA coupling 3/4" IG*

2.6 Accessories

Continuous-flow mixer:

- Fastener set for mounting on silo
- Optional clamping sleeve
  alternative for wedge lock (2 units)
  Mixing pipe is fastened to dry material pipewith clamping sleeve

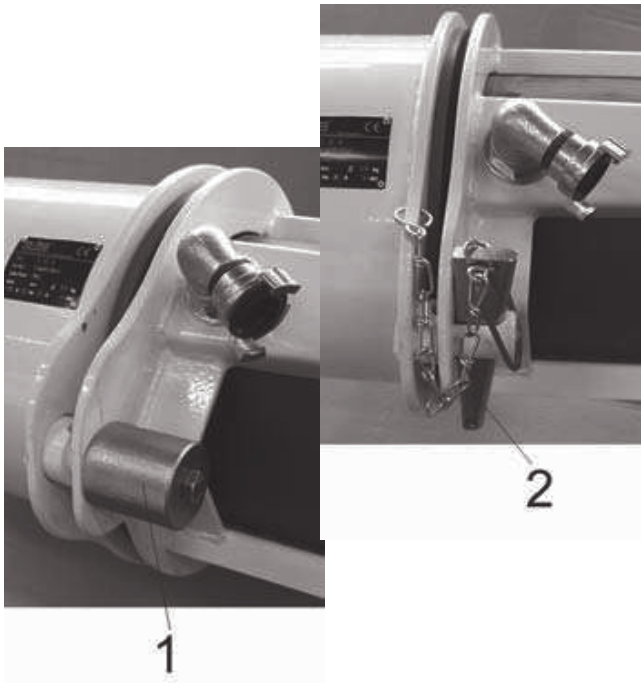

Figure 8: Connection between infeed and mixing pipe type IV

1 Clamping sleeve - optional

2 Wedge lock - standard

Switch box:

- Screwdriver for phase switcher
- Water hose with GEKA for connection to continuous-flow mixer
- S40 EC: Fastener plate for mounting on continuous-flow mixer
- S40 MR/ MRS: Suspension bracket for attachment to silo frame

2.7 Technical data

Continuous-flow mixer D50

Mixer output	Approx. 50 l/min (with screw pitch 60)
Drive motor	400 V 50 Hz 3 ph 4 kW, 260 min^{-1}
Electrical connection	400 V 50 Hz 3 ph
Connection value	10 A
Feed	5 x 2.5 mm^2
Fuses	16 A through e.l.c.b. circuit breaker (construction site panel)
Weight	Approx. 140 kg
Water connection	Water hose with GEKA coupling; infeed water pressure min. 3 bar
Dimensions of continuous-flow mixer (L x W x H)	2100 x 350 x 350 mm^3
Sound level	70 dB(A) sound pressure level at 1 m distance during operation (free field measurement)
Mortar material	Factory premixed only Dry mortar for continuous-flow mixer

S40 switch cabinets

Dimensions of the switch cabinet (L x W x H)	**S40 EC** 350mm x 340mm x 430mm
	S40 MR 560mm x 600mm x 150mm
	S40 MRS 560mm x 600mm x 150mm

2.8 Markings on the machine

on the switch cabinets:

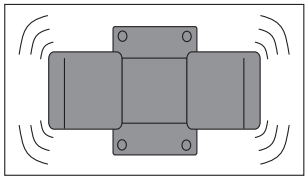

"Vibrator" connection

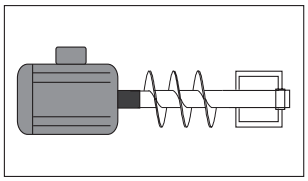

Mixer/operation

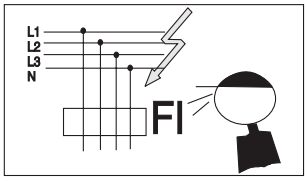

Operation only via e.l.c.b. circuit breaker

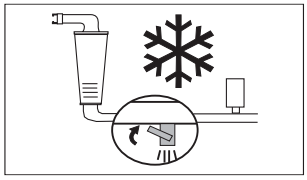

In freezing weather Drain water!

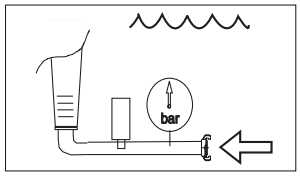

Water inlet

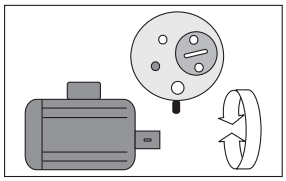

Phase reverser

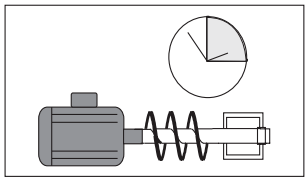

Mixer run time

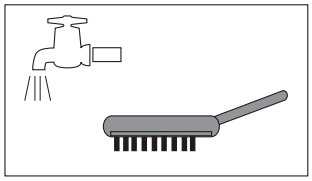

"Clean" switch setting

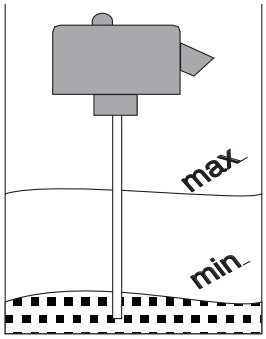

Connection for wet mortar sensor

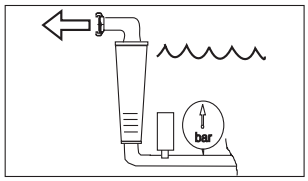

Drainage outlet

on the continuous-flow mixer:

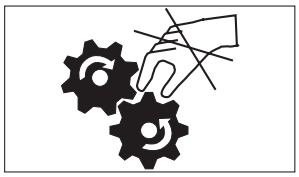

Caution: Do not reach into rotating parts

Beware of dangerous high voltage

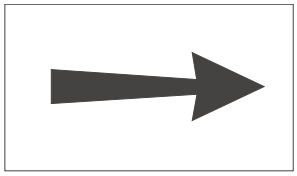

Required direction of rotation

3 Transport and location

The operating instructions and regulations of the silo must always be observed when transporting and setting up the silo.

3.1 Transport

The machine can be transported while attached to the silo. Carry out the following before transport:

Make sure that all bolts that fasten the continuous-flow mixer to the silo butterfly valve are present and tightly fastened.

Make sure that the continuous-flow mixer is mounted on the silo so the mixing pipe points up when the silo is laid down.

Special version D50 V with extended mixing pipe: Before transport the extended mixing pipe must be removed and secured as described in "D50 – securing the extended mixing pipe". The extended mixing pipe must not be transported unless secured as described.

Make sure that the continuous-flow mixer is empty.

Disconnect the mixer motor cable at the switch cabinet.

When using the S40 EC switch cabinet:
Make sure that all bolts that fasten the switch cabinet to the continuous-flow mixer are present and tightly fastened.

When using the S40 MR or MRS switch cabinet: detach switch cabinet from the silo frame and secure as specified.

3.2 D50 V: Securing the extended mixing pipe for transport

Before transport the extended mixing pipe must be removed and secured as specified. The extended mixing pipe must not be transported unless secured as described.

Separate infeed pipe and extended mixing pipe from each other (pictures 8,1; 8a,1; 8b,1)

D50 Type II

Loosen the fasteners between infeed pipe and extended mixing pipe

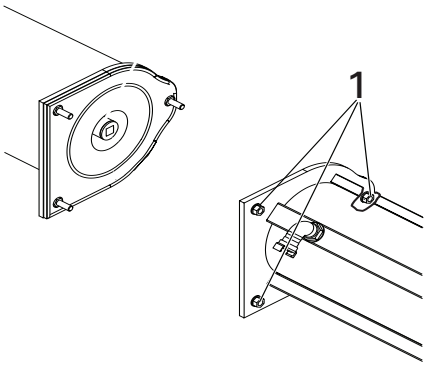

Figure 8:
1 Nuts

D50 Type IV safety equipment safety handle (standard)

- Pull off the safety handle (Figure 8a,1) and attach to holding plate (Figure 8a,2).
- The power is disconnected by disconnecting the plug connector (Figure 8a,3). First switch off motor with the double push button and main switch.
- Remove the two clamping wedges between infeed and mixing pipe (Figure 8a,4).

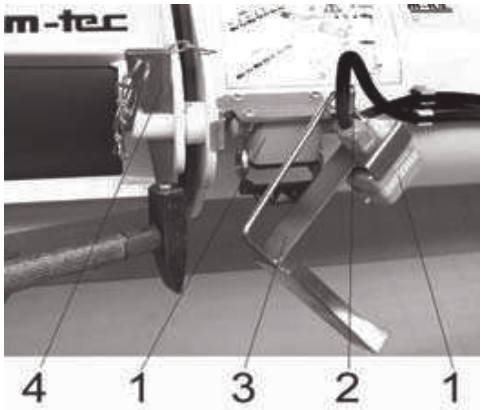

Figure 8a:
1 Plug connector
2 Holding plate
3 Safety handle
4 Clamping wedges

D50 Type IV safety equipment clamping sleeve (optional)

- Unscrewing the two clamping sleeves (Figure 8b)
- Pull extended mixing pipe from infeed pipe.
- Attach extended mixing pipe under infeed pipe (Figure 9, 3) and secure with pins and spring clips (Figure 9, 4).
- Insert mixing shaft into the extended mixing pipe.

Figure 8b:
1 Clamping sleeve

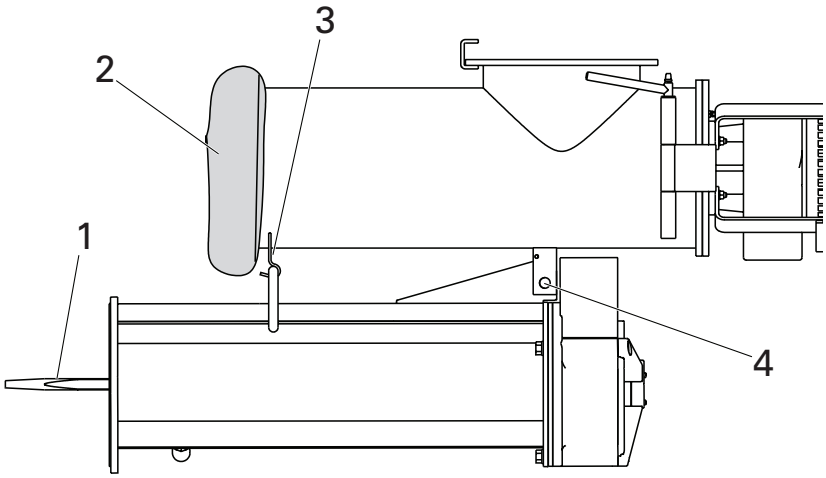

Figure 9: D50 V – Extended mixing pipe secured for transport
1 Mixer shaft
2 Rain cover
3 Attachment bracket
4 Pin and spring clip

A rain cover (art. no. 560129) can be used to prevent moisture from entering the the dry material pipe.

ATTENTION!

3.3 Setting up the silo

The operating instructions and regulations of the silo must always be observed when setting up the silo. This means that the silo must be securely positioned and secured to prevent unwanted movement. The silo must be set up on an elevated site outside the danger area.
If this is not possible, the workplaces at the silo must be protected by roofs against falling objects.

4 Assembly

4.1 Assembly of continuous-flow mixer at silo

The continuous-flow mixer must be operated only when mounted under a silo.

The continuous-flow mixer must mounted on the silo so the mixing pipe points up when the silo is laid down.

The continuous-flow mixer must be securely fastened to the silo butterfly valve with its integral flange.

- The integral flange of the continuous-flow mixer must be securely fastened to the silo butterfly valve with the six included bolts.

4.2 Assembly of S40 EC switch cabinet

The S40 EC is supplied installed on a base plate. Recommended procedure:

- First fasten the integral flange of the continuous-flow mixer to the silo butterfly valve with six of the eight bolts supplied so the mixer is secured.
- Slide base plate of S40 EC switch cabinet under the integral flange of the continuous-flow mixer.
- Fasten the base plate and the continuous-flow mixer to the silo butterfly valve with the two remaining bolts (Figure 10).
- Tighten all eight bolts securely.

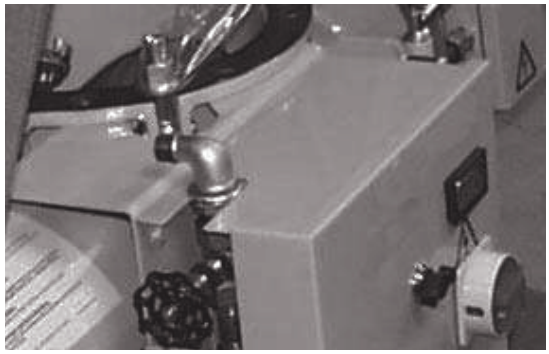

Figure 10: Fastening the S40 EC switch cabinet

4.3 Assembly of mixing pipe

ATTENTION!

- Insert mixer shaft (Figure 8, 2) into transport shaft (Figure 8, 1). The shaft must be clean and dry.
- Slide mixer pipe over (Figure 8, 3), centre it and fasten it.

Type II/III	with hex bolts
Type IV	Insert wedge locks and secure tightly with hammer. Fold safety bracket and insert safety pin.

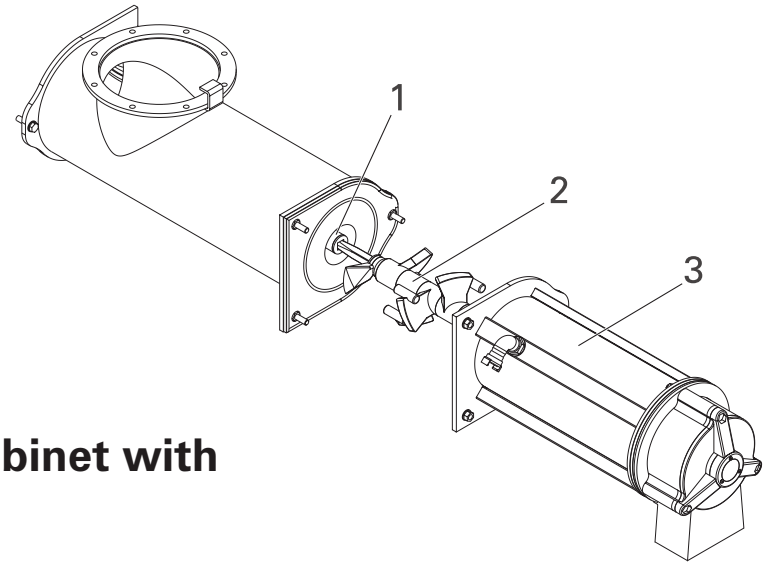

Figure 11: Assembly of mixing pipe

1 Transport shaft
2 Mixer shaft
3 Mixing pipe

4.4 Assembly of switch cabinet with suspension frame

- Attach switch cabinet to silo frame with suspension frame (not S 40 EC)

Figure 12: Attach switch cabinet to silo frame with suspension frame

5 Start-up

The continuous-flow mixer must be operated only when mounted under a silo.

The machine must be checked for operating safety every time before operation and any damage or defects must be ruled out.
This applies particularly for:
- the state of electrical wiring, plugs, connectors,
- the state of water lines and fittings,
- secure fastening of all attached components.
If any damage is found, the machine must not be operated until the damage has been professionally repaired.

When the machine is connected never reach into the machine, the mixing pipe or the discharge; you will risk serious injury.

The main switch must be set to "0" and the power cable disconnected before starting troubleshooting or maintenance work. Measures must also be taken to ensure that the machine cannot be connected to the power supply while such work is being carried out.

5.1 Switch cabinet and electrical connections

The machines must be connected to a construction site panel with e.l.c.b. circuit breakers.

A 16 A 5-pole 6h plug connector and a connection cable 5 x 2.5 mm² in cross section with a 16 A fuse is required.

Careless actions around the switch box or live wires and cables involve the risk of electric shock that may result in serious injuries, burns or death.

The main switch must be set to "0" and the power cable disconnected before any actions that require opening the switch cabinet.
Measures must also be taken to ensure that the machine cannot be connected to the power supply while such work is being carried out.

All maintenance and repairs at the switch cabinet must be carried out by qualified technicians only.

The switch cabinet is installed in degree of protection IP 54 and is resistant to the entry of foreign bodies and spray when closed.
When it is open it must be protected against the entry of water.

The machine must be protected against hazardous touch voltages by the compulsory operation of an e.l.c.b. circuit breaker in the power supply feed (construction site side).

If a fault occurs in the switch cabinet as a result of moisture or a technical fault, do not touch the switch cabinet and disconnect the power immediately. The power must not be connected again until it has been tested by a qualified technician and passed as functional.

The switch cabinet must not be cleaned with compressed air or by water, sand or steam blasting.

Connecting machine

- Connect cable from mixer motor to switch cabinet.
- Connect cable from vibrator (on silo) to switch cabinet.
- With MRS switch cabinet: if applicable connect wet mortar sensor (NMS type) to switch cabinet
- Connect switch cabinet to site panel with e.l.c.b. circuit breaker with CEE plug connector.

5.2 Direction of motor rotation

ATTENTION!

The direction of rotation of the motor must be checked before regular operation.
If the motor rotates in the wrong direction, the mixer and feed shaft will also rotate in the wrong direction. This will transport wet material from the mixing pipe into areas that must remain dry under all circumstances (infeed area and silo).
The direction of rotation of the motor must therefore be checked before the silo butterfly valve and the water infeed are opened.

5.2.1 Checking direction of motor rotation

- Set main switch to “1” and switch on the continuous-flow mixer at the “On/Off” double push button.
- Run machine for a short time, then switch off with “On/Off” double push button and set main switch to “1”.
- Check the direction of rotation of the motor at the fan.

The direction rotation of the fan must be the same as the direction of the arrow glued to the mixer motor.

5.2.2 Changing motor direction of rotation

Is the direction of rotation incorrect:

- Disconnect power.
- Press the pole reverser on the input plug inwards with a screwdriver and turn 180°; the pole reverser must click out again after it has been turned (Figure 13).
- Connect power plug again.

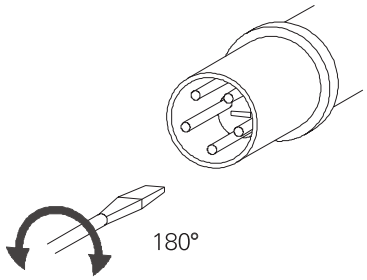

Figure 13: Pole reverser on input plug

5.3 Water connection

The infeed water pressure must be a minimum of 3 bar to ensure that the mortar is of even consistency.

ATTENTION!

- Check that the water inlet sieve is present and clean.
- Check that the water hose does not leak by filling it with water before connecting it to the machine.
- Connect the supplied water hose (Figure 14,1) to the water fitting on the switch cabinet and the GEKA coupling on the continuous-flow mixer.
- Connect external water hose to GEKA coupling of water inlet (Figure 14,5).
- Turn water infeed.

ATTENTION!

Water must not be taken from the supplementary water outlet (Figure 14,4) while the machine is operating.

The supplementary water outlet (Figure 14, 4) can be used for a separate water hose (e.g. for cleaning)

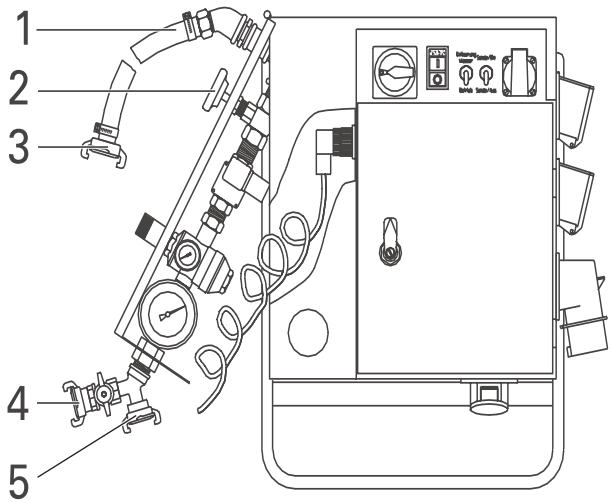

Figure 14: Water fittings

1 *Short hose*
2 *Fine-control valve*
3 *GEKA coupling for connection to continuous-flow mixer*
4 *Supplementary water outlet*
5 *External water connection*

5.4 Setting water flow

- Place catch basin under outlet.
- Remove safety split pin on silo butterfly valve.
- Open silo butterfly valve.
- Set main switch to “1” and switch on the machine at the “On/Off” double push button.

The machine is running now and the solenoid valve on the water fitting opens the water infeed. The water runs into the mixing pipe and is mixed with the material there.

- Check the consistency of the emerging mortar.
- If applicable, optimise the water quantity with the fine control valve (Figure 14, 2) on the water fitting.
- When working with products where the amount of water required is not known the machine must be started with the fine control valve fully open. During operation turn the fine control valve back until the correct consistency is reached.

Dispose of the mortar residue from the catch basin correctly as building waste .

5.5 Operation with wet mortar sensor (with S40 MRS switch cabinet only)

If the machine is switched on with a "On/Off" double push button, the sensor control may start it running spontaneously at any time, even if it is not running at the time (standby mode). Indication: the white lamp on the "On/Off" double push button is on.

The continuous-flow mixer can be controlled by a wet mortar sensor. The wet mortar sensor is generally installed in the supply tank of a pump. If this container is full, a signal is sent to the continuous-flow mixer controller and the mixer switches off. If the level falls below a specified point, the mixer starts again.

- Connect the wet mortar sensor plug to the S40 MRS switch cabinet (Figure 15, 2).
- Set rocker switch (Figure 15, 1) to "with sensor".

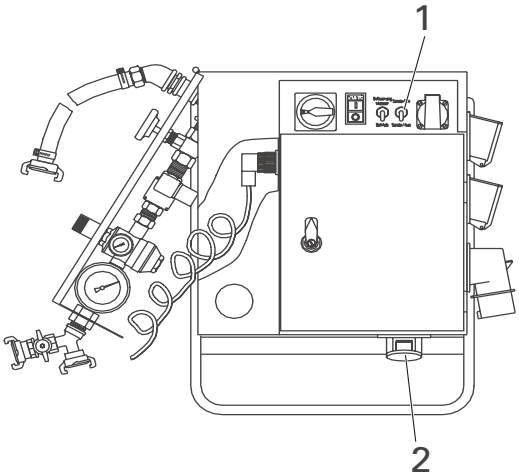

Figure 15: S40 MRS switch cabinet

1 Rocker switch "Operate with/without sensor"

2 Wet mortar sensor connector socket

6 Operation

When working with the machine, the applicable national and international safety regulations and legislation must always be observed, even if they are not explicitly mentioned in these instructions.

The continuous-flow mixer must be operated only when mounted under a silo.

The machine must be checked for operating safety every time before operation and any damage or defects must be ruled out.
This applies particularly for:
- the state of electrical wiring, plugs, connectors,
- the state of water lines and fittings,
- secure fastening of all attached components.
If any damage is found, the machine must not be operated until the damage has been professionally repaired.

When the machine is connected to electric power never reach into the machine, the mixing pipe or the discharge; you will risk serious injury.

The main switch must be set to "0" and the power cable disconnected before starting troubleshooting or maintenance work. Measures must also be taken to ensure that the machine cannot be connected to the power supply while such work is being carried out.

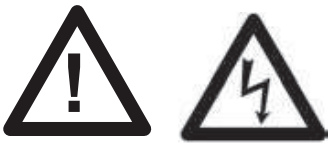

The machine must be connected to a construction site panel with e.l.c.b. circuit breakers.

A 16 A 5-pole 6h plug connector and a connection cable 5 x 2.5 mm² in cross section with a 16 A fuse is required.

Careless actions around the switch box or live wires and cables involves the risk of electric shock that may result in serious injuries, burns or death.

The main switch must be set to "0" and the power cable disconnected before any actions that require opening the switch cabinet.
Measures must also be taken to ensure that the machine cannot be connected to the power supply while such work is being carried out.

All maintenance and repairs at the switch cabinet must be carried out by qualified technicians only.

The switch cabinet is installed in degree of protection IP 54 and is resistant to the entry of foreign bodies and spray when closed.
When it is open it must be protected against the entry of water.

The machine must be protected against hazardous touch voltages by the compulsory operation of an e.l.c.b. circuit breaker in the power supply feed (construction site side).

If a fault occurs in the switch cabinet as a result of moisture or a technical fault, do not touch the switch cabinet and disconnect the power immediately. The power must not be connected again until it has been tested by a qualified technician and passed as functional.

The switch cabinet must not be cleaned with compressed air or by water, sand or steam blasting.

If the machine is switched on with a "On/Off" double push button, the sensor control may start it running spontaneously at any time, even if it is not running at the time (standby mode). Indication: the white lamp on the "On/Off" push button is on.

6.1 Filling with silo material

- Remove safety split pin on silo butterfly valve.
- Open silo butterfly valve.
- Move the lever on the valve back and forth until material flows out.
- Replace safety split pin with the butterfly valve open.

6.2 Time relay (S40 MR/MRS only)

The S40 MR and MRS models have a time relay. This can be used to set the mixer run time, e.g. until a crane bucket is full.

- Place empty container under outlet.
- Switch on machine.
- Record time required to fill container.
- Switch off machine and disconnect power cable.
- Open S40 MR/MRS switch cabinet and set time relay (Figure 16, 1) to the recorded time.
- Close switch cabinet.
- Connect power cable and switch on continuous-flow mixer.

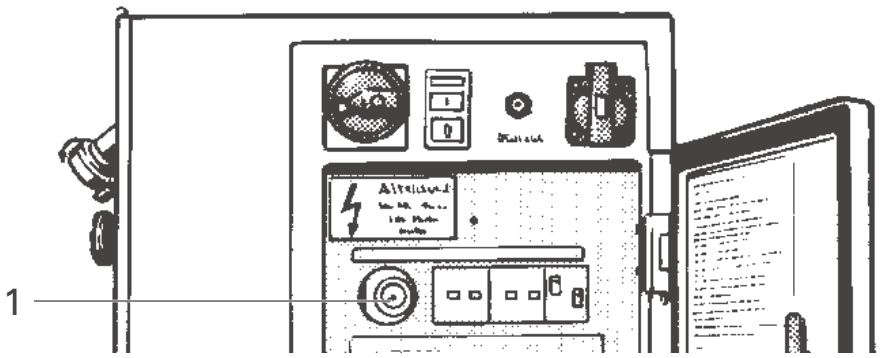

Fig. 16: Time relay
(on S40 MR switch cabinet in this case)

6.3 Normal operation

After opening the silo butterfly valve:

- Place catch basin under outlet.
- Set main switch to “1” and switch on the machine at the “On/Off” double push button.

The machine is running now and the solenoid valve on the water fitting opens the water infeed. The water runs into the mixing pipe and is mixed with the material there The mixed material is transported to the outlet.

6.4 Pauses

ATTENTION!

Pauses in work must be limited. All pauses must be shorter than the setting time of the current material. Solid material in the mixing pipe will cause difficult starting with the motor and may damage the continuous-flow mixer.

- Switch off the machine with the double “On/Off” push button and set main switch to “0”.

6.5 Winter operation

ATTENTION!

In freezing weather the machine may be damaged by water freezing in components that transport water. All water-carrying parts must be completely drained before extended downtime at low temperatures.

- Close water feed.
- Disconnect water hose.
- Disconnect water hose from mixing pipe.
- Open ball valve (see Figure 6/7, 6; “water fitting”).
- With S40 MR/MRS switch cabinet:
  Set “Operate/Clean” rocker switch to “Clean”;
  With S40 EC switch cabinet: switch off the machine with the double “On/Off” push button and set main switch to “0”.
- Disconnect power cable from site panel and switch cabinet.
- Allow water to drain completely.

The ball valve must be closed again before switching on the machine again.
In addition, the “Operate/Clean” rocker switch must be set to “Operation” again with the S40 MR and MRS switch cabinets.

6.6 Finishing work

ATTENTION!

The machine must be cleaned daily after finishing work as described in Chapter 7.1 "Daily cleaning at the building site".

The machine must also be cleaned once a week as described in Chapter 7.2.

Stop processing semiliquid material. Do not dispose of residue on the ground, but catch it a container and dispose of it correctly.

In freezing weather follow the directions in the "Winter operation" chapter.

7 Cleaning

7.1 Daily cleaning at the building site

ATTENTION!

The machine must be cleaned every day after finishing work.

Do not continue to process semiliquid material but drain it into a bucket and dispose of as required. Do not dispose of this material and cleaning water on the ground.

- Close silo valve and secure with split pin.
- Pull out vibrator plug on switch cabinet.
- Run continuous-flow mixer until empty and catch semiliquid material.
- Run machine until only clean water runs out of the continuous-flow mixer.
- Switch off the machine with the double “On/Off” push button and set main switch to “0”.
- Disconnect power cable from site panel and switch cabinet.

ATTENTION!

In freezing weather follow the directions in the “Winter operation” chapter.

7.2 Weekly cleaning

The main switch must be set to "0" and the power cable disconnected before starting troubleshooting or maintenance work. Measures must also be taken to ensure that the machine cannot be connected to the power supply while such work is being carried out.

Directions for cleaning once a week:

- Follow the directions in Chapter 7.1 "Daily cleaning".

Then continue as follows:

- Disconnect water hose from mixing pipe.
- Disconnect mixing pipe (Figure 17,6) from dry material pipe (Figure 17,3) (remove screws, clamping sleeves and wedge locks – for variations see Chapter 3.2).
- Check mixing pipe, mixing shaft (Figure 17,5 and 6) for blockages and clean if necessary.
- The connector between the mixing shaft and the transport shaft must be clean, dry and free of grease.
- Check mixing pipe bearing, mixing blade and wiper for wear and replace if necessary.

ATTENTION!

- Loosen screw (Figure 17,1) on motor plate/infeed pipe.
- Open motor (Figure 17,2) .
- Pull transport shaft (Figure 17,4) out of the dry material pipe (Figure 17,3).

ATTENTION!

- Clean dry section in infeed pipe, check infeed shaft and infeed pipe for blockages and clean if necessary.
- Check infeed shaft and mixing blade for wear and replace if necessary.
- Reassemble machine in reverse order.

Type II

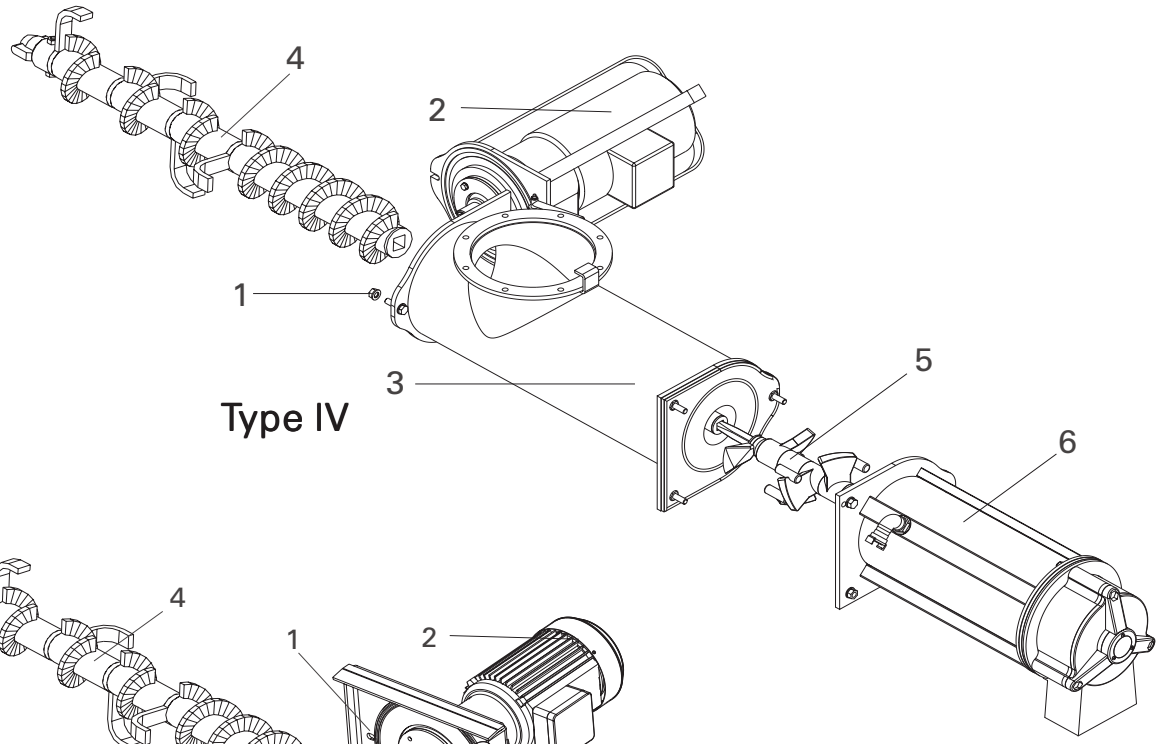

Type IV

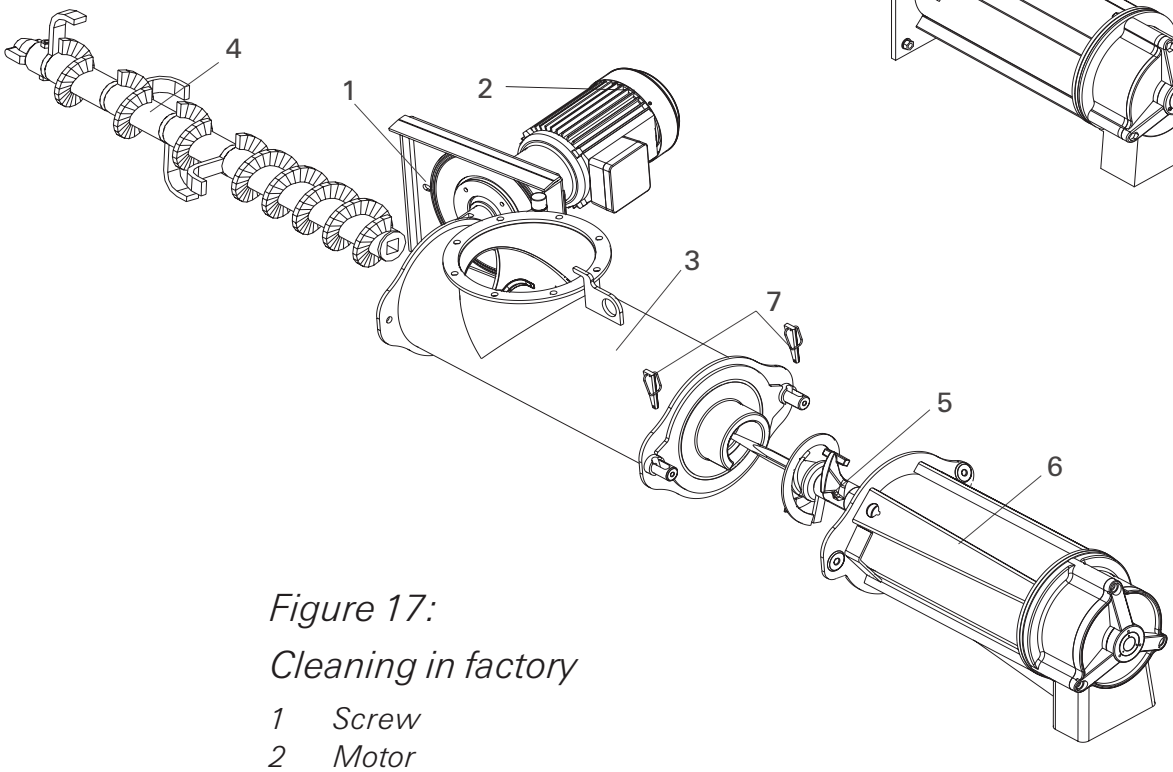

Figure 17:

Cleaning in factory

1 Screw
2 Motor
3 Dry material pipe
4 Transport shaft
5 Mixer shaft
6 Mixing pipe
7 Wedges (type IV)

8 Maintenance

The main switch must be set to "0" and the power cable disconnected before starting troubleshooting or maintenance work. Measures must also be taken to ensure that the machine cannot be connected to the power supply while such work is being carried out.

Use only original spare parts and accessories from m-tec mathis technik gmbh.

8.1 Lubrication chart

- Every four to six weeks lubricate grease points with one or two shots of bearing grease with a high-pressure grease gun (Figure 1).
- Fill the rubber collar on the continuous-flow mixer regularly with a grease gun.

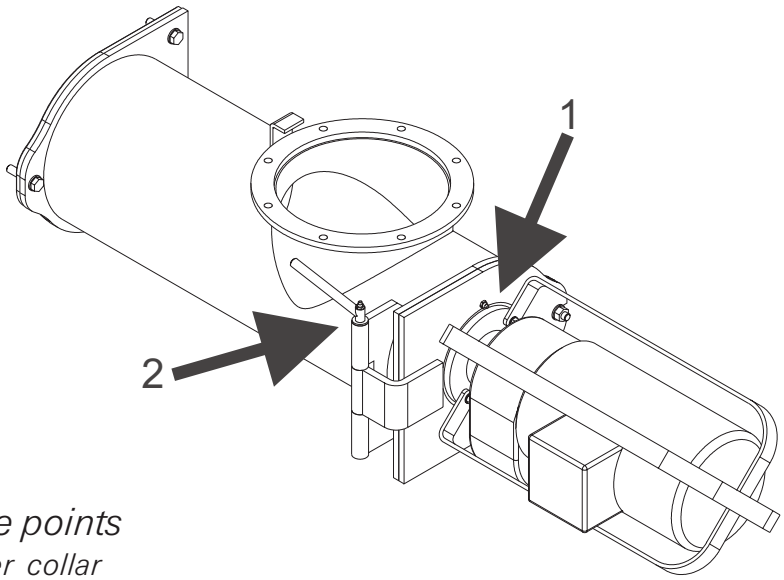

Figure 18: Grease points

1 Lubricate rubber collar
2 Lubricate the hinge (not necessary with type IV)

8.2 Oil change

The gear motors are maintenance-free for up to 8000 hours Then the gearbox must be thoroughly cleaned with a suitable flushing oil and the gear oil changed.

ATTENTION!

Gear oil must not be added between oil changes. Otherwise the gearbox may be overfilled, causing it to overheat.
Different grades of oil must not be mixed. The different grades of oil may separate and destroy the gearbox.

The applicable environmental protection requirements must be observed when disposing of oil, grease or cleaning agents.

We recommend the following gear oils for the gear motor:
Shell Tivela Oil 82;
the fill amount is 400 cc

If the specified oil type is not available, use one of the following types:

ARAL	Degol BG 220
BP	Energol GR-x P220
CALYPSOL	Bisol Oel MSR 114
ESSO	Sparton EP-220
HOUGHTON	Molygear 115
MOBIL	Mobilgear 630
SHELL	Omala 220

8.3 Servicing the water filters

The screen filters in the water fittings must be cleaned every 4–6 weeks. The filters are in the water inlet (Figure 19, 3) and the pressure restrictor (Figure 19, 1).

- Remove filters with special spanner (Figure 19, 2),
- clean filters under running water and
- blow out filters with compressed air.
- Install filters again and tighten connections.

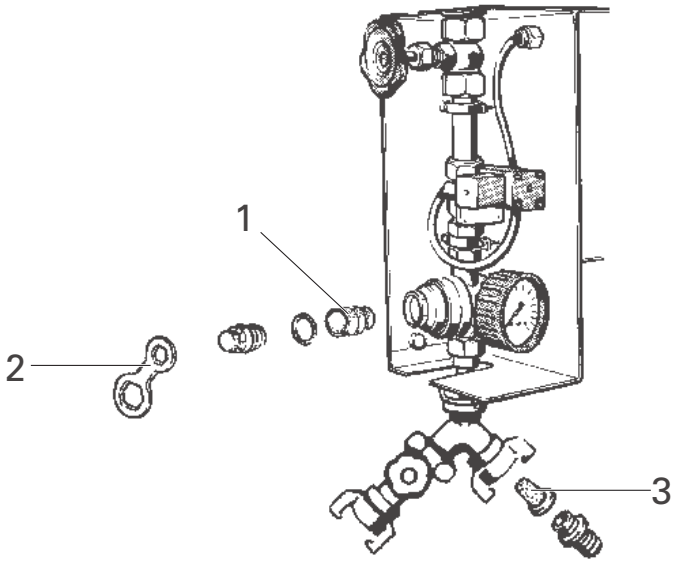

Figure 19: Cleaning filters

1 Filter in pressure restrictor
2 Special spanner
3 Filter in water inlet

9 Troubleshooting

The Troubleshooting Table is not intended to replace the detailed instructions in the appropriate sections of the Operating Instructions. Always observe the safety notes in the relevant sections.

Problem	Cause	Remedy
Electric motor will not start	No power	Check power connection, if necessary connect plug
		Check fuses in construction site panel
	Mortar in mixing pipe has set	Remove mixing pipe and clean it
	Motor circuit breaker has triggered (Figure 20, 2)	Press push button for motor circuit breaker in again
	Controller fuse defective	Replace miniature fuse
	With S40 MR/MRS switch cabinet: time relay set to “0” (Figure 20, 1)	Set time relay to desired run time

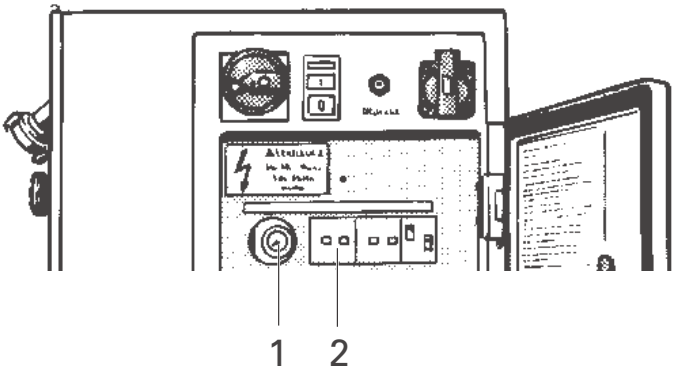

Figure 20: MR switch cabinet

1 Time relay
2 Motor circuit breaker

Problem	Cause	Remedy
No water	The solenoid valve on the water fitting does not open	Solenoid valve defective, replace
	Motor circuit breaker has triggered	Press in push button switch for circuit breaker in again
Water runs continuously	With version S40 MR/MRS with "Operate/Clean" rocker switch: Rocker switch is set to "Clean"	Set rocker switch to "Operate"
Mortar too stiff	Insufficient water	Check water infeed, Open fine control valve on water fitting more
Mortar too liquid	Too much water	Close fine control valve on water fitting slightly more
Variable mortar consistency	Material flow from silo not feeding evenly	
	a) Silo nearly empty?	– Fill silo – If present actuate material Agitator on the silo valve
	b) Vibrator not connected?	– Connect vibrator
	c) Vibrator on silo defective?	– Check vibrator; replace if necessary
	Aater screen filter in pressure limiter or inlet blocked	Clean filters (see Ch. 8.3)
	Large deposits on mixer shaft or mixing pipe	Clean deposits off parts

10 Spare parts and accessories

Use only spare parts and accessories supplied by m-tec mathis technik gmbh. m-tec mathis technik gmbh does not accept liability for any accidents resulting from the use of non-approved spare parts or accessories.

10.1 Spare parts

See our separate spare parts catalogue for a list of spare parts. To order parts please contact:
m-tec mathis technik gmbh, sales department:
Tel. no.: ++49 / (0)7631 / 709-112, or -216
Fax.: ++49 / (0)7631 / 709-116

10.2 Accessories

You can expand the area of application and improve handling of the machine with original accessories from m-tec. The following accessories for the machine are available:

- Water pump
- Flowmeter
- Blow-out unit
- Various fastening systems for attaching the switch cabinet to the silo
- Retainer belt with snap-hook
- Wet-mortar sensor, NMS type, incl. retainer
- Special spanner for cleaning filters
- Transport screw with different pitch on request

11 Circuit diagrams

Legend for Figure 21:

S1 Main switch
S2 "Off" switch
S3 "On" switch
S4 e.l.c.b. circuit breaker (optional)
Q1 "Continuous-flow mixer" motor circuit breaker
F1 Fuse sec 42 V
F2 Fuse sec 230 V
K1 "Vibrator" contactor
K2 "Mixer" contactor
K3T Flasher relay
T1 Transformer
Y1 Solenoid valve 42 V
H1 "Controller On" indicator light

Legend for Figure 22:

S1 Main switch
S2 "Off" switch
S3 "On" switch
S4 "Heat" switch
S5 "Operate/Clean" rocker switch
T1 Transformer
F1 Automatic circuit breaker prim 400 V
F2 Automatic circuit breaker sec 230 V
K1 "Continuous-flow mixer" contactor
K2 "Vibrator" contactor
K3T "Vibrator" time relay
K4T "Mixer runtime" time relay
Y1 Solenoid valve
D1 Diode
R1 Solenoid valve
Q1 "Continuous-flow mixer" motor circuit breaker

Legend for Figure 23:

S1 Main switch
S2 "Off" switch
S3 "On" switch
S4 "Heat" switch
S5 "Operate/Clean" rocker switch
S6 "Operate with/without sensor" rocker switch
H1 "Controller On" indicator light
T1 Transformer
F1 Automatic circuit breaker prim 400 V
F2 Fuse sec 230 V
F3 Fuse sec 42 V
K1 "Continuous-flow mixer" contactor
K2 "Vibrator" contactor
K3T Flasher relay
K4T "Mixer runtime" time relay
K5T "Sensor" time relay
K6 Auxiliary relay
Y1 Solenoid valve
D1 Diode
R1 Heater
Q1 "Continuous-flow mixer" motor circuit breaker

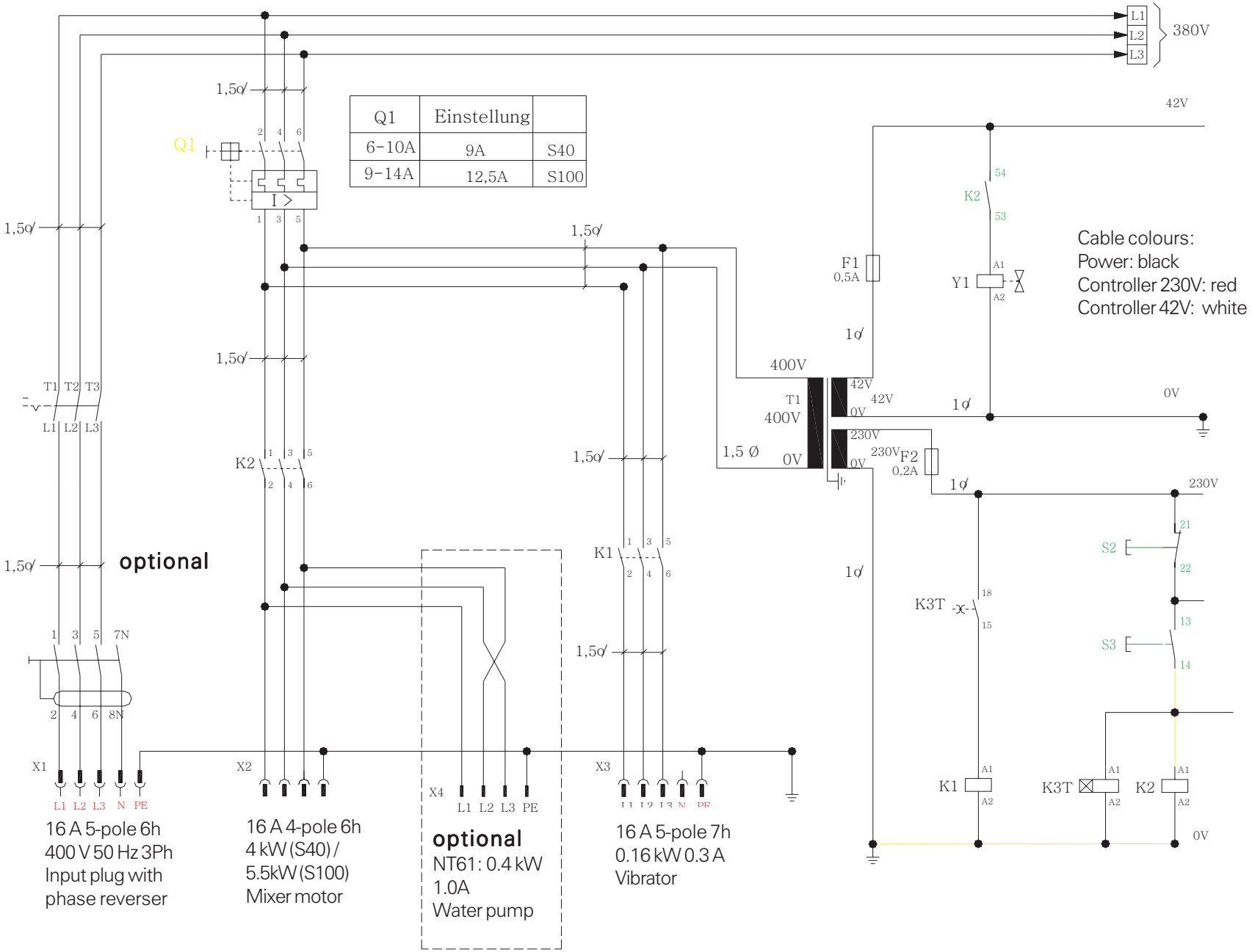

Figure 21: Circuit diagram S40 EC (Art. no.391280/005-030204)

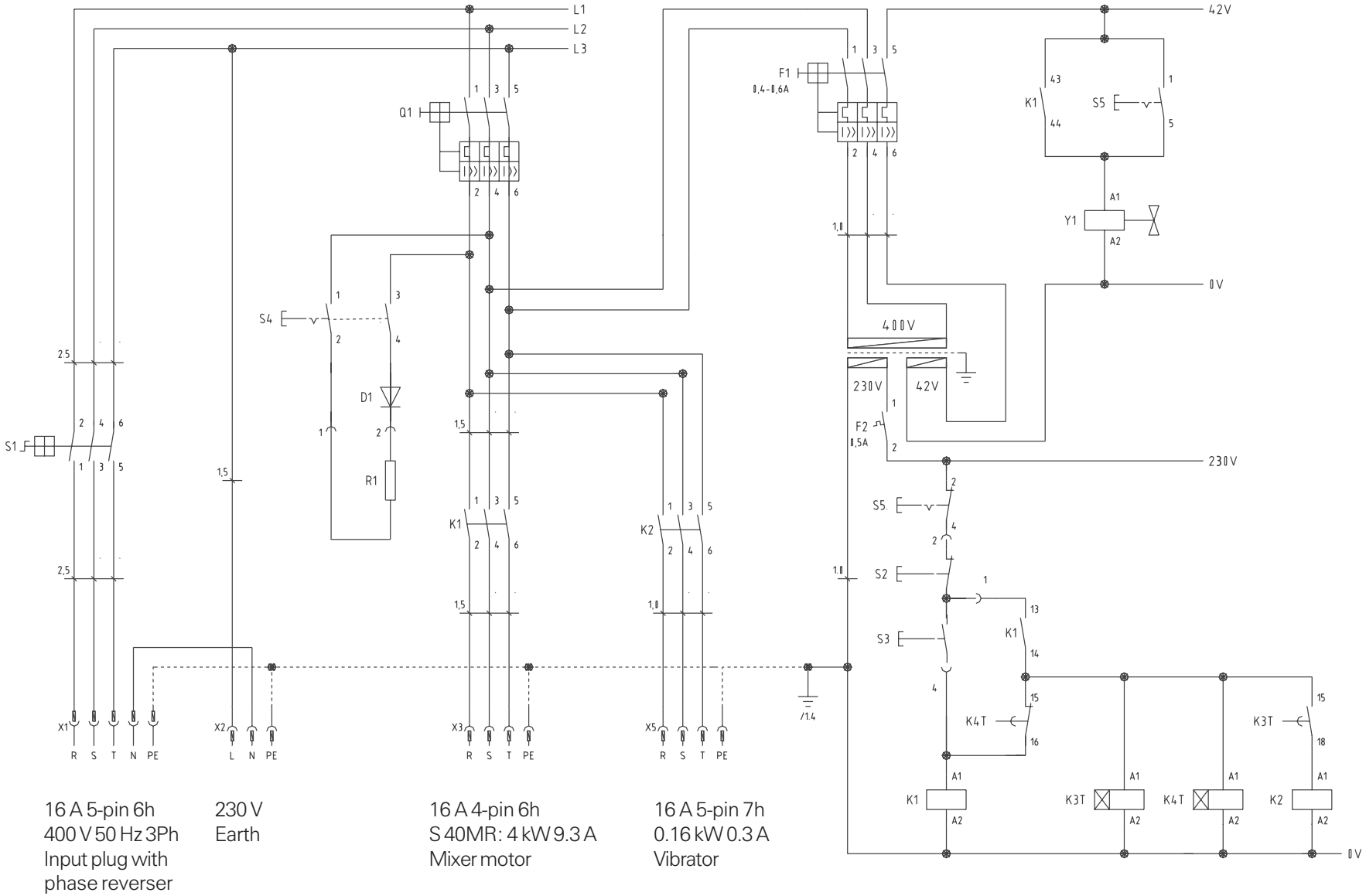

Figure 22: Circuit diagram S40 MR

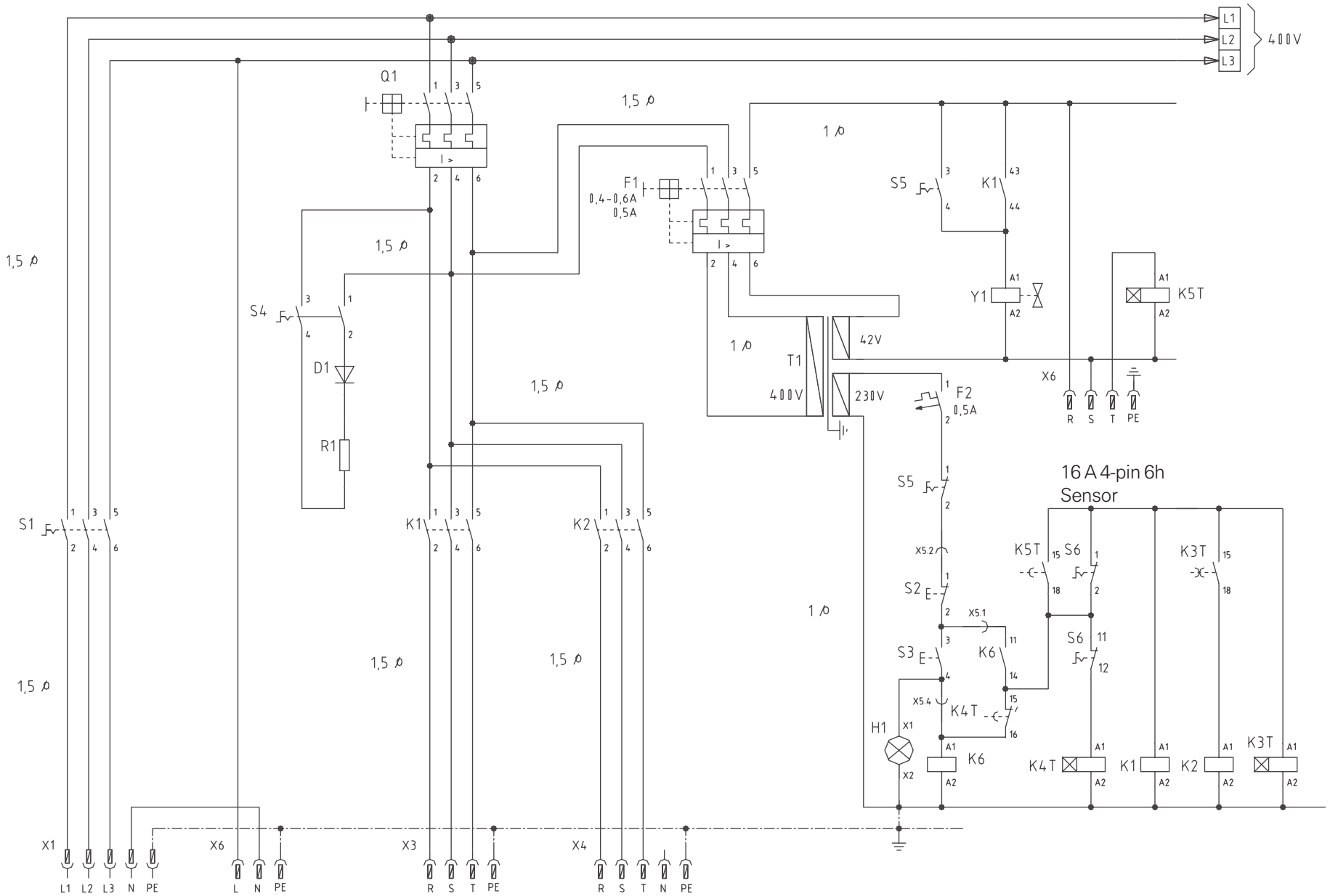

Figure 23: Circuit diagram S40 MRS

16 A 5-pin 6h
400 V 50 Hz 3Ph
Input plug with
phase reverser

230 V
Earth

16 A 4-pin 6h
S 40MRS: 4 kW 9.6 A
Mixer motor

16 A 5-pin 7h
0.16 kW 0.3 A
Vibrator