INSTRUCTION MANUAL

MR450

ELECTRIC

ALLENTOWN SHOTCRETE TECHNOLOGY, INC
421 SCHANTZ ROAD
ALLENTOWN, PA. 18104
800-553-3414
610-398-0451
Fax 610-391-1934

⚠ WARNING

DO NOT ATTEMPT TO OPERATE THIS EQUIPMENT WITHOUT A THOROUGH UNDERSTANDING OF THE OPERATIONAL, MAINTENANCE AND SAFETY CONSIDERATIONS CONTAINED IN THIS TECHNICAL MANUAL.

TO PREVENT DAMAGE TO EQUIPMENT AND/OR INJURY TO YOURSELF OR OTHER PERSONNEL, THESE INSTRUCTIONS MUST BE FOLLOWED CAREFULLY.

A COPY OF THIS MANUAL SHALL ACCOMPANY THE UNIT AT ALL TIMES.

FOR PARTS AND SERVICE PLEASE CALL OUR TOLL FREE NUMBER

PARTS: 800-553-3414 Ext. 214

SERVICE: 800-553-3414 Ext. 213

For best assistance, please have the equipment Model and Serial Numbers available at time of inquiry.

The Model Number and Serial Number are available on the equipment Data Tag attached to the frame of the equipment.

Record the following information on this equipment below:

Model No. _____

Serial No. _____

Date Purchased _____

TABLE OF CONTENTS – MR450

INTRODUCTION

The Allentown Powercreter pump is a high-pressure, hydraulically powered piston pump for the mixing, pumping, or spraying of concrete, grout, mortar, and refractories. This manual describes the operation, maintenance, and safety considerations that must be followed. Close attention to these details by the operator and maintenance personnel is necessary to assure a minimum of problems while striving for maximum productivity and safety.

Pump operation is dependent on the *"pumpability"* of the material to be pumped. Pumpability can be defined as the combination of physical properties - of both the material and pump - which determine if the material will flow into the inlet chamber of the pump and can therefore be discharged. The physical properties of the material which, in varying degrees, determine its pumpability are: water content, size of aggregate and gradation, slump, viscosity, density, presence of reinforcing fibers, and the presence of additives that improve pumpability or influence set time. The Allentown Shotcrete Technology sales department will provide application assistance to determine the Powercreter that best suits your application needs. Call 1-800-553-3414.

Prior to pump operation, the operator must be thoroughly familiar with the operation of the equipment so that it can be used in a safe manner. After the operator has gained experience in the safe operation of the equipment, he or she can work toward high volume concrete placement. For the safe operation of this equipment, the qualifications for, and the conduct of the operator, should be as described in Section 2.

SPECIFICATIONS

The specifications for this unit with all applicable data are provided on the unit's DATA TAG, usually located inside the motor starter box.

Allentown
SHOTCRETE TECHNOLOGY

DATA TAG

MODEL # _____ S/N _____

HYD CYL BORE _____ IN STROKE _____ IN

MAT CYL BORE _____ IN MAX MAT PRESSURE _____ PSI

ACCUM PRECHARGE _____ PSI PRESS SWITCH SET _____ PSI

MAIN PUMP PRESS _____ PSI REMIXER CIR R.V. SET _____ PSI

PUMP CIR R.V. SET _____ PSI MIXER CIR R.V. SET _____ PSI

SWING TUBE CIR R.V. SET _____ PSI FUEL TANK CAP _____ GAL

STROKES @ MAX RPM _____ PER MIN UNIT WEIGHT _____ LB

HYD FLUID TYPE _____

ADDITIVE PUMP _____ GPM S/N _____

ADDITIVE PUMP MOTOR: _____ V _____ HZ _____ HP

DIESEL ENGINE

MODEL # _____ S/N _____ _____ HP

ELECTRIC MOTOR

_____ HP _____ VAC _____ HZ _____ AMPS

OPER PANEL S/N _____ POWER CORD _____ GA

07034

OPERATIONAL SAFETY

Any person assigned to operate, troubleshoot, maintain or repair the Allentown pump, must be thoroughly familiar with the operating and safety instructions. Your safety and the safety of others are at all times very important. To work safely, you must understand the job you do. If in doubt, use extreme caution and obtain assistance from trained personnel.

The Allentown pump is constructed with safety features for operating personnel, however, construction features alone cannot ensure complete safety. Safe work practice, observance of O.S.H.A. regulations, specific work methods and procedures, timely maintenance and an alert, well-trained operator are all factors contributing to safe operation. In order to highlight the situations which have historically been the cause of accidents, the information in this manual addressing safety is preceded with a graphic symbol to identify the principal hazard. Within the frame of the graphic symbol, the following signal words indicate the likelihood of occurrence and the degree of potential injury or damage. If in doubt about this classification, assume the worst case since some hazards, which are minor at the time of occurrence, can develop into hazards with a severe degree of potential injury of damage.

SIGNAL WORD	LIKELIHOOD OF OCCURANCE	DEGREE OF POTENTIAL INJURYOR DAMAGE
⚠ DANGER	Will occur if warning is ignored.	Severe
⚠ WARNING	Can occur if warning is ignored.	Severe
⚠ CAUTION	Will or can occur if warning is ignored.	Minor

Various hazards and their usual causes are described below and shown with the associated graphic symbol. The graphic symbols associated with any of the signal words are repeated throughout this manual when the likelihood of the hazard exists. The symbol provides an index permitting reference to this section for a more extensive discussion of the hazard.

Never open or remove the hopper grate when the pump is in operation. It protects against contact with moving parts that are capable of amputating the fingers or hand. Serious injury can occur.

The hydraulic system of the Allentown pump operates under high pressure. A pinhole type leak can form a fine stream of hydraulic fluid, which can penetrate skin, fill a large area under the skin, and cause serious infection. This hazard can be avoided by keeping the body parts away from the surfaces of pressurized hydraulic hoses. Feeling with hands for the source of leaks is generally the cause of accidents from this hazard.

The mechanical linkage located on the side of the mixer, opposite the dump control valve, positions the mixer grate when the mixer is dumped. Because of the relative motion of this link, the mixer drum and the hopper produces a scissors movement which can pinch anything in its path. Confirm that this area is clear of all personnel when operating the mixer. Severe bodily injury can occur to any body member pinched.

Reliable operation of this equipment is dependent on proper operation, scheduled cleaning, and maintenance. Failure to follow instructions can result in accelerated wear or equipment failure. During operation, repair, or troubleshooting, problems may arise that seem singular but may be due to several causes. The information in this manual should be used to assist in the safest and best manner to operate the pump. Use caution and safe methods in the repair and operation of the equipment.

The rapid release of a blocked hose can cause a material hose to whip or move abruptly with potential injury to personnel. Do not attempt to dislodge a blockage with increased or continued pumping pressure. Dislodge the blockage as instructed in the “Clearing Material Plugs” section of this manual. Only trained personnel should be permitted to handle the material hose.

The hydraulic system of the Allentown pump operates under high pressure. Fluid at high pressure will discharge at a high velocity if the hydraulic system is opened to atmosphere by venting, loosening of flange bolts, removing fittings, etc., when the power source is operating. Until discharged, the accumulator has a stored charge of oil under pressure that operates the swing tube cylinder. Stop the motor of the material pump and allow sufficient time for the accumulator to discharge. Confirm discharge by checking the pressure gauge, which should read 0 PSI. When removing fittings or removing any hydraulic component, wear safety goggles and cover the joint from which hydraulic fluid will discharge, using a large cloth to absorb and discharge the fluid. If hydraulic fluid gets in the eyes, flush with a generous amount of clean water and consult a physician.

In the case of a blocked material line, never open any of the couplings in the material delivery line without first reversing the pump and pumping backward to remove pressure in the system. Discharge can propel particles at high velocity, capable of eye damage. If eye protection is not worn, serious eye injury can result.

Never put hands in the lubricating wash box when the pump is operating. Oscillating linkage can amputate the fingers or hand. Severe injury can result. Never work on any part of the pump that is in motion while the motor is running. Take time to stop the motor and turn off/disconnect power supply.

OPERATOR QUALIFICATIONS

Before operation, the operator must be thoroughly familiar with the equipment and its operation so that he can operate it in a SAFE manner. His eligibility to operate the equipment must be based on the following qualifications:

1. **Equipment must be operated only by experienced operators or trainees under the direct supervision of an experienced operator. Unauthorized personnel must not be permitted to assist or remain in the immediate vicinity of the unit while it is in operation or during the performance of any maintenance, inspection, cleaning, repair, or start up operations.**
2. **Individuals who are not familiar with operating instructions, have not received on-the-job supervised training, and are not familiar with the signal codes used at the construction site must not operate equipment.**
3. **Individuals who cannot comprehend the signs, notices, and operating instructions that are a part of the job must not operate equipment.**
4. **Equipment must not be operated by anyone under the age of 21 years.**
5. **Equipment must not be operated by anyone with seriously defective eyesight or hearing, or anyone with physical or mental impairment (such as epilepsy, heart disease, or progressive neuro-muscular deterioration). Physical and mental qualifications must be verified by a physical examination at least annually.**
6. **Individuals under the influence of alcohol or drugs shall not operate this equipment.**
7. **Equipment must not be operated while operator is eating, drinking, reading, or is more than six feet distance from the controls.**
8. **An operator who has asked to be relieved because he feels physically or mentally unfit must not operate equipment.**

RESPONSIBILITY OF EMPLOYERS AND OWNERS

As an owner or employer using this equipment, it is your responsibility to ensure that the operator is qualified, has read this manual, and has received training in the safe operation of the Allentown pump, and the safe work practices for the job to be accomplished. It is also your responsibility to provide for regularly scheduled preventative maintenance and repair of the pump by trained repair personnel using only parts supplied by Allentown Shotcrete Technology. Modification of any part of this pump can create a new safety hazard. If the pump is modified or rebuilt it must be done under the direction of the Allentown Shotcrete Technology Factory. No field modification of the pump is permitted, unless authorized in writing by Allentown Shotcrete Technology.

It is further the responsibility of the owner or employer to train the operating personnel in all the specific requirements, government regulations, safety regulations, safety regulation of the product liability insurance company, precaution, and work hazards which exist in a work situation and ensure that all involved take the necessary precautions and safety measures. Only a trained and qualified operator who abides by safe work practices can avoid accidents.

PRINCIPLE OF OPERATION

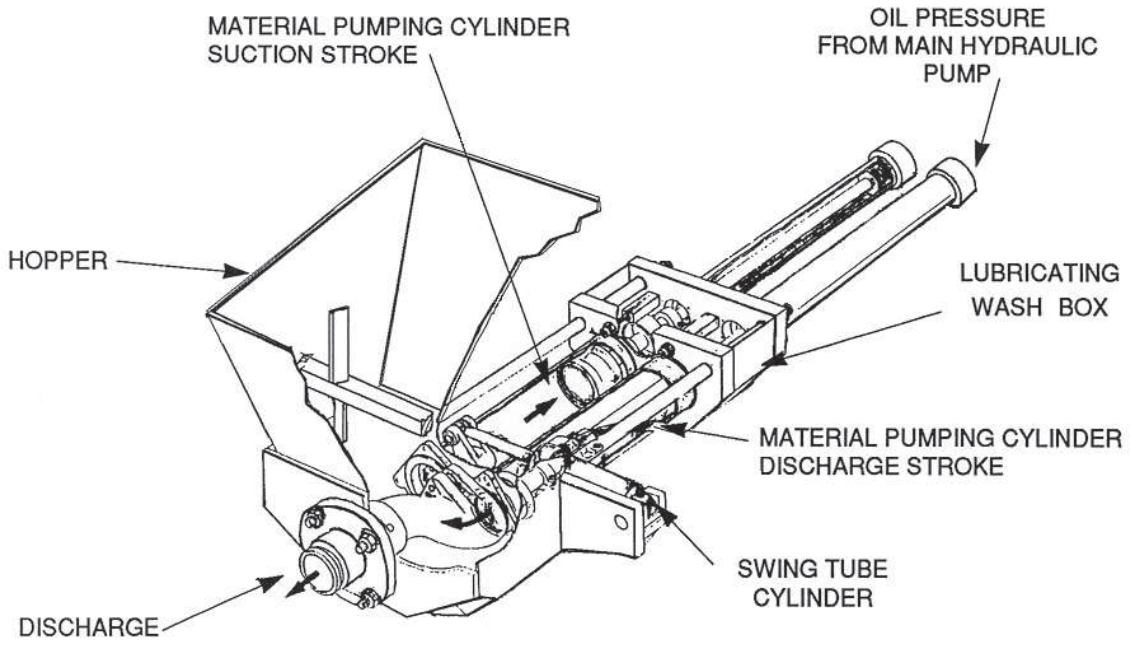

MATERIAL PUMP

THE MATERIAL PUMP

The material pump consists of a receiving hopper and two material pumping cylinders and pistons that are driven by two hydraulic cylinders and a swing tube valve. A continuous flow of material through the delivery line is produced by the sequential operation of the two material pistons with the swing tube. The swing tube shifts between the two material cylinders under a controlled electronic/hydraulic sequence to direct the flow between the two material cylinders, the hopper, and the discharge outlet. The swing tube allows one material cylinder to be directly open to the hopper on the suction stroke, while simultaneously the other cylinder is directly connected through the swing tube to discharge. At the end of the piston travel the direction changes and the swing tube is shifted to direct the material flow from the other cylinder to discharge.

THE HYDRAULIC SYSTEM – MR450

INTRODUCTION

The MR450 has a three pump hydraulic system. The first pump, which is the first main pump off the electric motor, is a variable displacement piston pump. This pump powers the hydraulic pumping cylinders. These cylinders are controlled through a directional valve, which is operated from the processor controls. The processor controls gets signals from the proximity switches that are located in the wash box. Each retracted stroke of the hydraulic pumping cylinder will signal the processor controls to switch direction. The next two pumps are mounted directly to the first pump. This is a double gear pump. The first section of the gear pump operates two functions. The first function is to power the mixer hopper motor. A manual 2-spool directional control valve located near the operator controls operates this function. The next function provides power to the lifting cylinders, which lifts the mixer for dumping the mixed load into the material hopper. This is also controlled using the other control valve on the 2-spool valve. The second gear pump supplies oil to the accumulator manifold, which powers the hydraulic cylinder that operates the switch of the swing tube.
For the hydraulic component P/N's, please see the Hydraulic Schematic with its parts list in this manual.

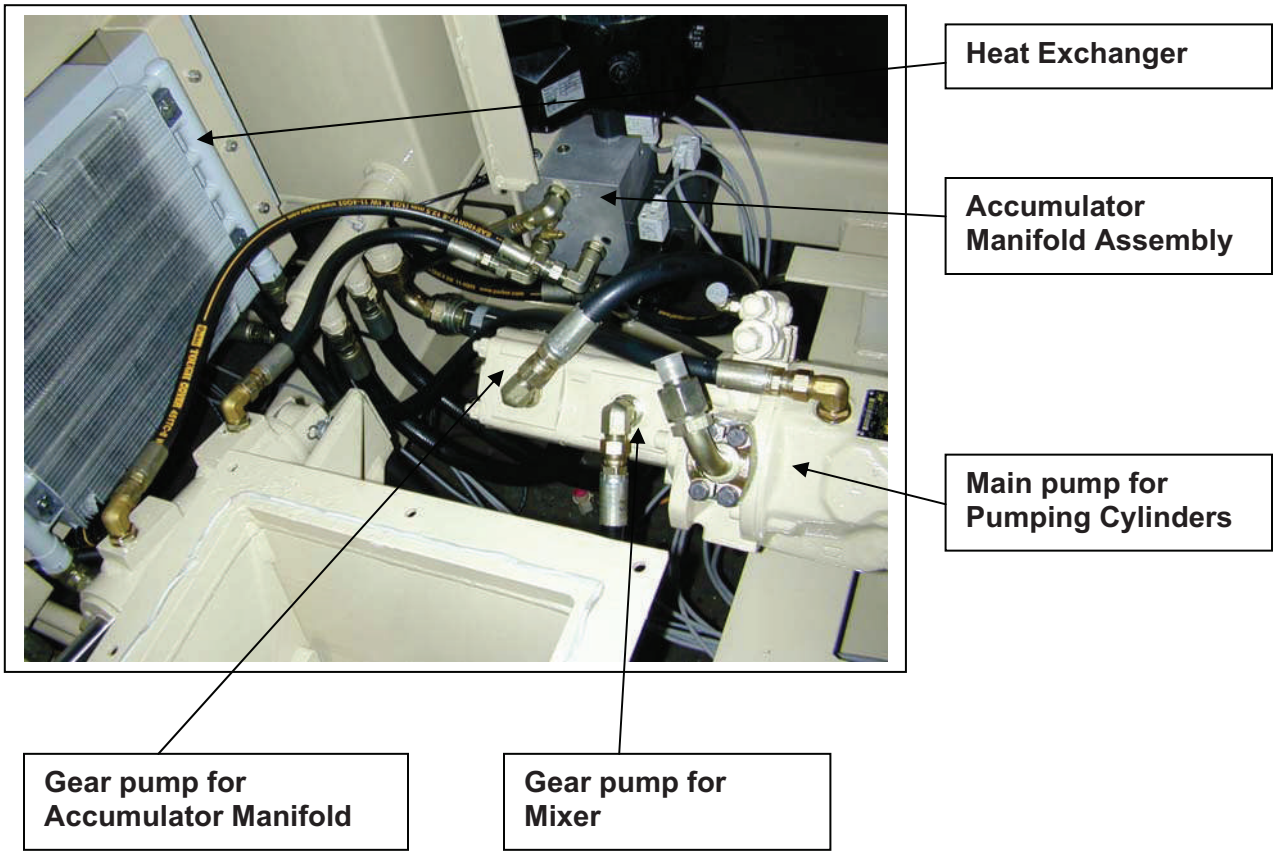

HYDRAULIC SYSTEM COMPONENTS

Return filter with gauge

Hydraulic oil cooler

Pumping cylinder manifold

Accumulator

Mixer lift valve. Pull up to lift the mixer. Push down to lower the mixer.

Mixer control valve. Push down for forward mixing. Pull up for reverse operation.

Re-mixer control valve. Push in for forward operation. Pull out for reverse operation.
(Re-mixer optional on MR450)

HYDRAULIC SYSTEM

PUMPING CYLINDERS

The two hydraulic cylinders are linked by means of a cross over loop system. This cross over loop is located on the rod side of the cylinders. As one cylinder is pumping, powered from the piston side, the oil on the rod side is being forced out over to the other cylinder's rod side, thus forcing the other cylinder to retract. See Fig. 1. When the cylinder that is being retracted meets with the proximity sensor, which is detected by the piston adapter, the system will switch and run the opposite way. To ensure that there is equal and full travel of both cylinders, there are four check valves located internally of both cylinders (two/cylinder) which add oil to the side that is being pushed back to make certain a full retraction is made. These check valves prevent "short stroking".

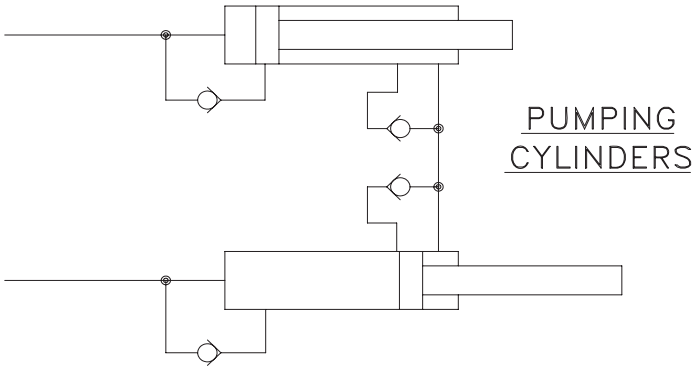

FIG. 1

ACCUMULATOR (SWING TUBE) CIRCUIT

The hydraulic cylinder switching the swing tube is powered through an accumulator assisted circuit. When the Pump Motor/Mixer button is pressed, the main pump motors will turn on sequentially. Ten seconds after the electric motor/diesel engine starts, the manifold On/Off Valve closes to charge the accumulator to a preset pressure. Once this pressure is reached, which is determined by a pre-set pressure switch, the system will hold this pressure by means of a check valve that is in the manifold. The On/Off Valve will switch, sending oil back to the tank. At this point, the system will hold and wait for the first response from the processor signaling to switch. After switching, the system will recharge, hold, and wait for the next signal. When the machine is turned off a Dump Valve in the manifold will slowly discharge the pressure from the accumulator back to the tank. There should be no pressure reading on the gauge.

Note: while the charged accumulator circuit is holding for its signal, and that response takes a long period of time, it is common for the system to turn on and off to recharge the accumulator to its preset pressure. The pressure switch has a differential pressure setting of 100 to 200 psi.

OPERATOR CONTROLS

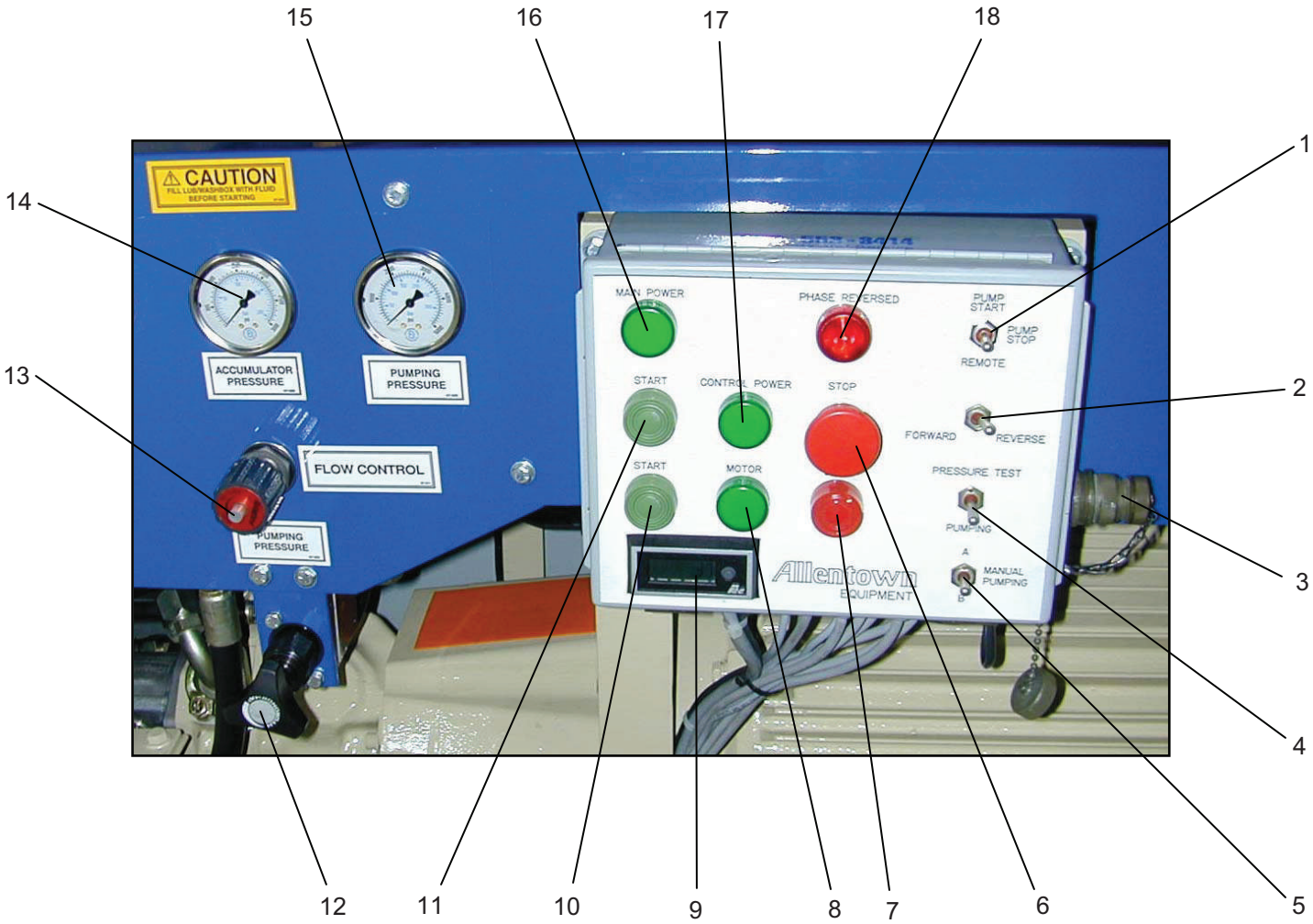

CONTROLS IDENTIFICATION

1. **PUMP START/PUMP STOP –** Turns on hydraulic pressure, regulated by the pumping pressure knob. When switch is in “REMOTE” position, the pump can be turned on and off from the corded remote.

2. **FORWARD /REVERSE –** Used for manual Forward and Reverse pumping.

3. **REMOTE CONTROL SOCKET –** The remote control cord is plugged into this socket. In order to avoid unintentional operation of the machine, set the control levers and switches of the material pump on the control box and remote control to the neutral position prior to any switchover from local to remote and vice versa.

4. **PRESSURE TEST SWITCH –** Must be in “PUMPING” position for normal operation. In the “PRESSURE TEST” position the pump will make one reverse stroke, stop, and the pump will high pressure out.

5. **MANUAL PUMPING SWITCH –** This switch provides a manual override of the automatic cycling of the pumping cylinders. Each time the switch is toggled, the material pump goes through alternating strokes of the material cylinders. In the event of failure of the automatic cycle control circuit during pumping, this switch allows manual control of the pump.

6. **EMERGENCY STOP –** Pushing on the palm button will shut down system and consequently all power to the electric motors, stopping all pump functions.

7. **MOTOR STOP BUTTON –** Pressing this button will stop the electric motor that drives the hydraulic pumps and the control power.

8. **ELECTRIC MOTOR INDICATOR –** Illuminates when the “Motor Start” button is pressed and will stay lit while in operation.

9. **STROKE COUNTER –** Counts the number of strokes of the material pump, with zero reset.

10. **ELECTRIC MOTOR START BUTTON –** This will start the electric motor that operates the hydraulic pumps.

11. **CONTROL POWER ON BUTTON –** This button will turn on the Control Power when pressed. The Control Power is the power required to run the pump operations.

12. **PRESSURE REDUCING VALVE (OPTIONAL) –** Used to set the maximum pumping hydraulic pressure in the pumping circuit. Turn CW to increase pressure and CCW to decrease pressure.

13. **FLOW CONTROL –** The flow control hand knob adjusts the output pressure of the hydraulic pump. To vary the discharge output, the flow control knob should be used. Turning the knob CCW increases pressure.

14. **ACCUMULATOR GAUGE –** Indicates the pressure of the swing tube/accumulator circuit.

15. **PUMPING PRESSURE GAUGE -** Displays the hydraulic pressure used to pump the material. The resulting material pressure is a function of the piston diameters of both the material and hydraulic cylinders. See Figure 2 and the Data Tag for this pump to determine material pressure versus hydraulic pressure.

16. **MAIN POWER INDICATOR –** Illuminates when there is power to the main electric system. The main electric panel disconnect switch will be on.

17. **CONTROL POWER INDICATOR –** Illuminates when the control power "Start" button is pressed and will remain lit while in operation.

18. **PHASE REVERSED INDICATOR –** Illuminates when the incoming power phase lines are reversed in assembly. This will indicate that the motor is running in reverse. **CAUTION: <u>DO NOT</u>** run the motor in reverse. This will cause catastrophic pump failure.

HYDRAULIC TANK – OIL LEVEL/TEMPERATURE GAUGE

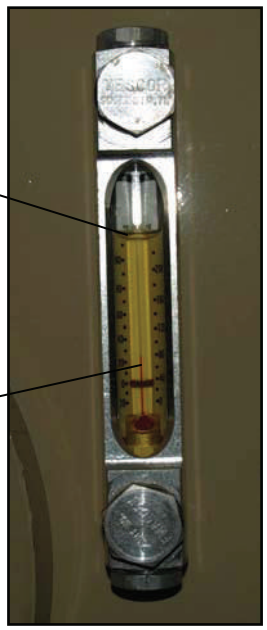

Hydraulic Reservoir Oil Level Gauge – Never operate the pump when the oil level is not visible in the sight tube. Periodic inspection of the oil level during pump operation and after shut-down is a recommended practice. This will protect against accidental loss of oil. When the pump is running the oil level should be at mid-point in the sight glass.

Hydraulic Oil Temperature Gauge – The normal range of the hydraulic oil temperature is 100º F to 160º F. Oil temperature of less than 50º F is in the cautionary range. The material pump should not be operated at full output until the oil reaches temperatures above 50º F as hydraulic pump damage may occur. Oil that is below 10º F should be preheated by running the motor with the material pump turned off.

MIXER OPERATION

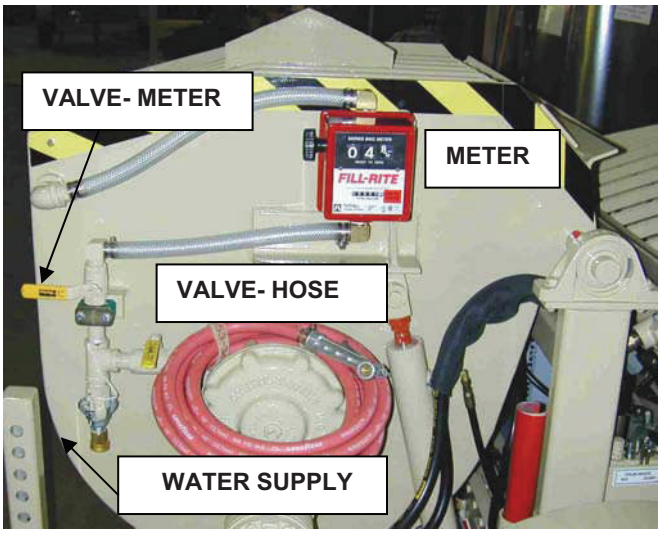

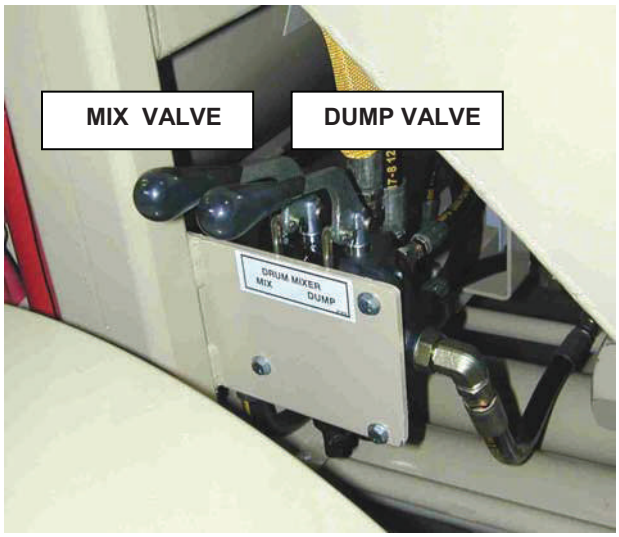

The mixer control valve is a two spool valve. The mix valve has detents in both the off and mix positions and will remain in either position unless actuated manually. The dump valve is spring loaded to neutral.

MIX – The mixing paddles are rotated by pushing down the mix valve handle. When mixing is complete, move the mix valve to the neutral position which will stop the rotation of the mixing paddles and avoid excess splashing when dumping the load. If a stone is lodged between the paddle and drum and the mixer stalls, pull the handle up from neutral. This will reverse the paddles. Do this ONLY in a stall condition. Running the mixer in reverse for a long period a time can cause damage to the paddles and mixer seals.

DUMP – To raise the drum and dump the load, raise the dump valve handle. The spring centered or neutral position of the dump valve handle will position the drum in any position of its travel. Lower the drum by lowering the handle of the dump valve handle. Do not depend on the neutral position of the dump valve to hold the drum in position. Always install the prop rod around the fully extended lift cylinder rod to hold the mixer drum in an elevated position.

WATER SUPPLY – A combination “claw coupler/garden hose” connector is provided for connecting the mixer to a water supply. The line tees into two branches, both controlled by a ¼ turn shut off valve. To add metered water to the mix through the spray bar, open the shut off valve in the branch containing the resetable water meter and spray bar. When the water meter indicates the amount of water desired for the mix, close the “meter” valve. The other valve is for the “hose”. That operates the hose and spray nozzle for clean up.

DAILY SAFETY CHECK OF EQUIPMENT

1. Equipment must not be operated at any new site or at the start of a new shift until a safety check is made of the condition of the equipment.
2. Equipment must have a sign-off sheet attached to the unit where an operator can report any damage, defects, problems, or accidents to the next shift's operator and work supervisor.
3. Confirm that the unit has received scheduled lubrication. See "Maintenance Intervals" in this section. Inspect the wash box to ensure it contains a lubricant.
4. Walk around the unit and inspect for damaged or missing parts. All safety devices and provisions to protect against accidents such as warning labels, decals, safety guards, etc. must be in place. Do not remove or alter any of these items and replace any which are missing or defective. Safety Decals will be replaced free of charge. See the "Parts Section of this manual. Visually inspect air and hydraulic hoses for indications of leaks or damage. Confirm that no foreign objects are in the hopper or lubricating wash box that would interfere with operation.

SET-UP OF EQUIPMENT – Locating the Equipment on the Jobsite

1. Locate the material pump on the most level ground possible.
2. Prior to placing equipment, check the condition of the soil. Keep sufficient distance from excavations or slopes.

SET-UP OF MATERIAL DELIVERY LINE

1. It is the responsibility of each pump owner/operator to check the material delivery system pressure capacity with the manufacturer if these components are not supplied by Allentown Shotcrete Technology. Failure to observe these specifications can result in serious personal injury and damage to the equipment. Allentown Shotcrete Technology recommends the use of only shouldered or a

Heavy Duty pipeline system, hose and clamping devices that are specifically designed for material pumping applications. Allentown Shotcrete Technology has connection packages available for the material pump which contain couplings, reducers, material hose, air hose, nozzles, tips, and clean-out balls. Contact our sales department for additional information.

2. The inside diameter of the material pumping pipeline must be at least three times the size of the largest aggregate in the mix, and, with some difficult mixes, four times the size. For example, a difficult mix must have a three inch line to pump 3/4 inch aggregate material. The larger the line diameter, the less pump pressure will be required, or a higher output rate can be achieved with a large line at the same pressure.
3. Ideally, using the same size pipeline as the size of the material cylinder will allow very low pressure pumping at long distances. From a practical standpoint, the larger the line, the heavier and more difficult it will be to set up, place, and clean up. Utilize as little reduction as possible in the line. Additionally, long reducers use less pump output pressure than short reducers.
4. The material delivery line should be set up using a minimum of rubber hose since rubber hose has three times the resistance to material flow as compared to steel pipe. One length of rubber hose at the discharge end of the delivery system will provide flexibility for changing the discharge point and provide the capability to bend the hose for downhill pumping.
5. The most direct line from the material pump to the placement site should be used.
6. Clamp type flanges should be clean and have seals that will retain the slurry in the delivery line.
7. Horizontal pipelines must be adequately supported. Support the pipeline attached to the pump outlet. If the material system crosses rebar, support the pipe/hose so that it does not contact the rebar.
8. If the jobsite has a vertical material delivery system, the vertical pipeline should be anchored to the building every ten feet of height.

9. Place the hoses or pipe in sufficient length to reach the farthest delivery point. It is easier to remove sections than to add additional sections after pumping has begun.
10. Material will flow with less back pressure through pipe than through hose. Bends in the hose or elbows in the delivery line will require more pressure. These conditions should be taken onto consideration when laying out the delivery system.
11. Vertical and downhill pumping are more difficult than horizontal pumping. Vertical pumping requires higher pumping pressure while downhill pumping can cause separation of the material which may result in a blockage in the material delivery line.
12. When laying pipeline, utilization of as few elbows and reducers as possible is recommended.
13. Replace any worn or damaged hoses, pipeline, or couplings immediately.
14. In hot and/or dry weather, pre-soak the hose in water to avoid absorption of moisture from the pumped material.
15. Spray a release agent such as WD-40, Form Oil, or Kleen Kote on all accessible parts that will be in contact with the pumped material to ease clean up after operation. Do not use diesel fuel as this has a negative effect on the hopper seals as well as other components.

OPERATION OF EQUIPMENT

Connecting AC Power to the Pump

The electrically powered Powercreter Pump can be supplied with a power cable to connect to a power supply. Have a qualified electrician install the cable between the motor control box and the power supply in accordance with local code. Hookup with an undersized power cable will limit power to the machine which can result in reduced performance and/or damage to the motor and control box. When the disconnect switch is in the on position, the green indicator light for the main power should be lit. If the red Phase Reversed light comes on when the Motor Start button is pressed, immediately turn off the machine. The electrician must switch two wires of the three phase power at the power supply. In order to preserve the integrity of the motor starter panel, do not interchange wires in the motor starter panel.

WARNING: Contact with High Voltage can result in serious personal injury or death.

1. Confirm the daily safety check has been performed.
2. Verify that the pan mixer grate is lowered and in place.
3. Confirm that the Emergency Stop button is reset by pulling outward.
4. With the disconnect switch of the motor starter box in the on position, confirm that the green indicator light for the main power on the control panel is lit. If the red indicator lamp labeled “Phase Reversed” is lit when the motor start button is pressed, two wires of the three phase power must be interchanged. See the “Connecting AC Power to the Pump” in the previous section.
5. Push the “Control Power” start button. The green indicator should light. This will energize the microprocessor.
6. Wait at least five seconds then press the Motor Start button.

NOTE: Once the system is running, the accumulator system will automatically charge after about ten seconds. Once charged, there should be a reading on the accumulator pressure gauge of the preset psi charge. If this does not happen, shut down motor and follow start up procedure again.

7. In cold weather starts, let the pump run until the hydraulic oil temperature reaches at least 50º F. Once the oil reaches this temperature, pump operation can continue.

FUNCTIONAL CHECK

Once the motor is running and all conditions are ready to start production, a functional check of the equipment and any optional accessories should be performed prior to adding material to the hopper.

1. Check to assure the accumulator is charged and holding the preset pressure. This pressure setting is recorded on the equipment's data tag.

NOTE: It is common for the accumulator system to recharge periodically when the pump is at idle. A slight internal hydraulic leakage within the system is normal. Once the pressure deviates more than 100 to 200 psi, the system will automatically recharge.

---

2. Check the swing tube oscillation. Toggle the "Forward/Reverse" switch to assure that the swing tube moves freely.

CAUTION: Make sure that there are no objects in the hopper prior to switching the cylinder.

---

3. To check the pumping cylinders:
   - Turn the pumping speed potentiometer dial to the "2" position.
   - Toggle the "Pump Start" switch and observe for automatic oscillation of the pumping cylinders.
   - Toggle the "Manual Pumping" switch to confirm that the manual override will function each of the pumping cylinders.
4. Actuate the remixer valve. Observe for the rotation of the remixer blending paddles.
5. Turn on the pan mixer paddles using the pan mixer start switch. Raise the pan mixer grate to confirm that the grate cut-out switch is operational. This switch should stop the mixer rotation when the grate is lifted.
6. If there is an optional accelerator pump being used, make sure it is primed and ready for operation. See the accelerator pump manual for start up instructions.

LUBRICATING THE MATERIAL DELIVERY LINE

An important prerequisite of pumping is the proper lubrication of the pipeline or hose system at the start of the pour. Failure to lubricate the material delivery line will contribute to the plugging of the line, resulting in excessive downtime to clear plugs.

The choice of lubricating agents is dependent upon the physical properties of the material being pumped. Contact the Allentown Shotcrete Technology parts department for line lubricant.

First wet the hopper with lubricating agent and then slowly pump the lubricating agent into the pipeline system. This will provide a smooth coating in the pipeline system ahead of the material to be pumped while preventing bleeding and cracking of the material. The amount of lubrication required will depend on the length of the line, the line diameter, and the pumpability of the material being pumped. The minimum is 5 to 6 cubic feet for short runs of small diameter line. It can be a cubic yard or more for several hundred feet of large diameter line. Experience will indicate the proper amount to be used although it is always safe to have too much rather than too little.

Once material is added to the hopper and begins to flow through the line, the hydraulic pressure gauge and the flow from the material line should be monitored to ensure that a plug or blockage is not forming. Only after pressure and flow are stable should the pump speed be increased to the planned operating rate.

PRECAUTIONS DURING PUMP OPERATION

1. The operator and nozzleman must always wear eye protection and hard hats.
2. Do not operate the Allentown Shotcrete Technology pump without the hopper grate mounted firmly in place. Never stand on the hopper grate or place any parts of the body into the hopper while the motor is running.

WARNING: Failure to follow these precautions can result in serious personal injury or death.

---

3. In the event of downtime during material placement, it may become necessary to stop pumping. During these periods, the material should be moved every 10 to15 minutes. One method to move material is to reverse the pump and convey backwards two or three strokes and then turn the material off for 10 to 15 minutes and then pump forward two or three strokes. If delays continue and the material starts to set, it may become necessary to clean out the material delivery system and the material pump. Experience with each application will determine how long material can be safely held in the system before it becomes necessary to clean out the delivery system and the material pump. If shut down periods exceed 2 to 3 minutes, turn off the motor between moves to prevent separation of the mix in the hopper due to vibration. Separation of the mix in the hopper can cause a blockage in the delivery line when pumping is resumed.
4. When pumping long distances or stiff mixes expect less volume than with shorter lines and wetter mixes. Water leaking from hose coupling gaskets can cause separation of the mix in the material line and subsequent blockage at that point. Damaged hoses with internal restrictions can also cause blockages.

6. The maximum material pressure is a function of the maximum hydraulic pressure and the areas of the hydraulic and the material cylinders. (See Fig. 2). Maximum pressure is only obtained under a “no flow” condition. Average pumping pressure will normally be somewhat less than the maximum. Pressures are highest at the material pump outlet and reduce uniformly to zero at the discharge end of the material pipeline under normal pumping conditions. Do not kink the material delivery hose. If the hose is kinked during material placement or if a dry pack or blockage does occur in the material delivery system, the flow of material will be stopped and pressure will build up to maximum in the material delivery system to the point of the blockage. If a plug has formed, follow the instructions in the “Cleaning Material Plugs” section.

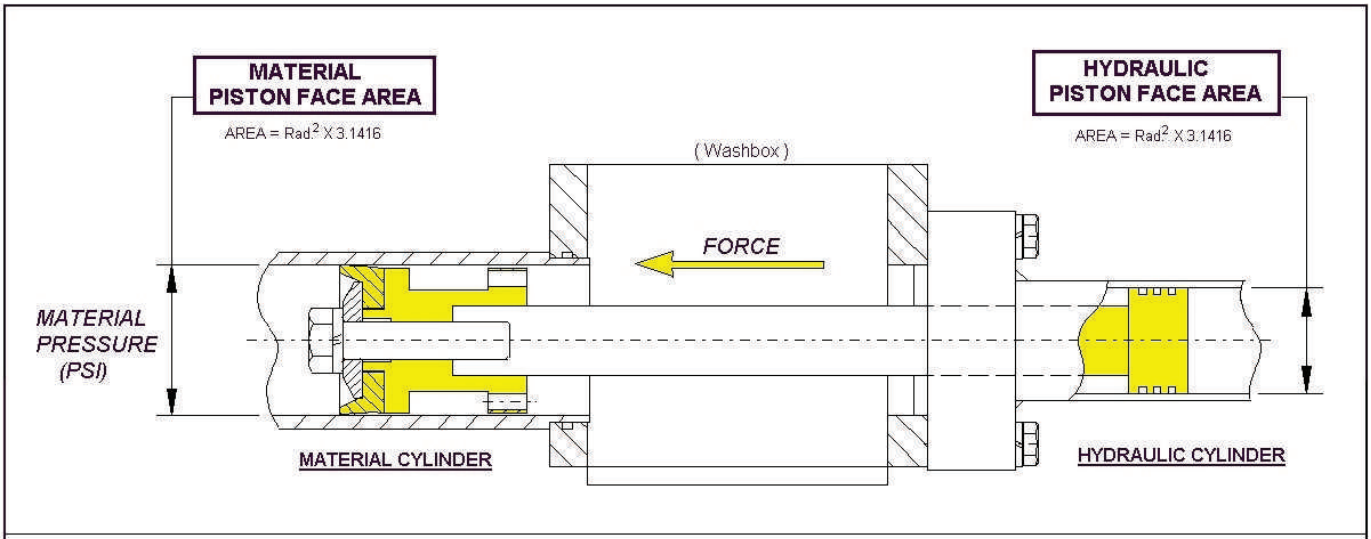

$$\text{MATERIAL PRESSURE (PSI)} = \left(\frac{\text{HYDRAULIC PISTON FACE AREA (IN.SQ.)}}{\text{MATERIAL PISTON FACE AREA (IN.SQ.)}}\right) \times \text{HYDRAULIC PRESSURE (PSI)}$$

FIG. 2 HYDRAULIC PRESSURE vs. MATERIAL PRESSURE

7. Downhill pumping can be difficult on some jobs. When the pump is stopped the material can flow slowly in the material line and cause the hose to collapse. A plug can form at the point of hose collapse. To prevent this, the hose can be “kinked off” at the discharge while the pump is stopped. This will prevent the gravity flow. The use of stiffer mixes when pumping downhill will also avoid gravity flow.

8. When pumping vertically up along the side of a building (above 40 ft.), installation of steel pipe securely fastened at intervals of 10 feet to support the pipe column is recommended. 90º long radius pipe sweeps should be installed at the top and bottom of the steel line. A 25 ft. (or shorter) section of hose off the pump should be used while the balance of the horizontal distance to the vertical line should be pipe. This type of installation has been proven satisfactory on many jobs where material is being pumped to heights in excess of 100 feet.
9. When using snap couplings with gaskets to join hoses, they should be washed and cleaned after each use. Dip both the couplings and the gaskets into water prior to use to permit easier installation.

If the delivery system is blocked for any reason, or the line kinked at the start-up or during the pump operation, the pump pressure could straighten out the kink or force out the blockage. The rapid surge of material could cause the line to whip or move in such a manner that it may cause injury to personnel.

10. A slight pulsation of the delivery hose near the pump will always be noticeable. Excessive pulsation near the pump is normally due to higher than average line pressure caused by stiff, harsh mixes or extremely long pumping distances. The use of hoses with a larger internal diameter than specified in the “Set-Up of Equipment” section will reduce the line pressure.
11. In order to reduce the line pressure, a slight amount of water may be added to the mix. The use of an admixture may also help. (See the ‘Admixture’ section in this manual.)

CLEARING MATERIAL PLUGS

The probable causes for material plugs are:

- Attempting to pump a mix that is not pumpable. See “Introduction”.
- Failure to clean up after a previous pour. See “Clean Up at End of Pour”.
- Poor pipeline set-up. See “Set-Up of Material Line”.

When a blockage occurs in the material delivery system, the pumping pressure gauge will reach the maximum of the hydraulic system and the material will not flow from the material line. To clear the plug:

- Immediately stop the pump.
- Switch the swing tube from Forward to Reverse.
- Switch the pump to Start and pump two strokes in reverse to get the pressure at the plug back to the material pump.
- Switch the pump to Forward and observe if the plug is dislodged. If material is flowing, slowly increase the volume to the desired output. If material is not flowing, repeat the previous steps several times.
- If Reverse pumping did not dislodge the plug, stop the pump and walk along the hose until the point of blockage is found. The hose will be soft immediately past the blockage. Elevate the hose at that point with the blockage hanging down. Shake or hit the hose with a rubber mallet until the blockage is broken up.
- Switch the pump to Forward and observe if the plug is dislodged. If material is flowing, slowly increase the volume to the desired output.
- If none of the above methods are effective in dislodging the plug, rotate the section of line containing the plug end for end or replace the section with a clean section of line.

Even after pumping in reverse, it is possible for sections or all of the material in the delivery line to be under pressure. Clear the immediate area of all personnel and wear eye and body protection prior to opening any flanges. Open any clamps with caution to slowly discharge any pressurized material. Start the pump at a low volume rate until a steady flow of material is being pumped.

CLEAN UP AT END OF POUR

Clean the pump as follows:

1. With the pumping speed set low, pump the remaining material out of the hopper until it is half empty and then turn the pump off.

2. Add enough water to the material hopper to make a thin slurry.

3. Place the Forward/Reverse switch to the Reverse pumping mode and turn the pump on. The reverse pumping will cause the water to mix with the material and form a thin slurry.

4. Switch the pump to Forward and pump the slurry through the line followed with a mixer-load of water.

5. Open the hopper clean out door.

6. With the pump turned on and in Reverse pumping mode, turn on a water hose and run water into the discharge outlet. This will draw water into the material cylinders and push rock and sand out through the open hopper door.

***CAUTION:* Do not insert hose nozzle or hands into outlet while motor is running.**

If material remains in the hopper, turn off the pump. A solenoid operated dump valve built into the accumulator circuit will automatically discharge the circuit when the power is turned off. Check the pressure gauge to ensure that it reads zero psi. There are moving parts in the hopper and lubricating wash box. The operator and any assistant must know and follow the correct procedures and use caution when cleaning the pump. DO NOT put hands or tools into hopper, outlet, or lubricating box while the power is on. Use the clean out tool supplied with the pump to clean the outlet and swing tube area.

7. Repeat steps 2 through 4 if material remains in the hopper.

8. If the machine will be left at the jobsite unattended, it should be secured from unauthorized use.

9. Life of the internal seals of the remixer shaft is extended by cleaning thoroughly. After cleaning at the end of the day, apply lubricant to the surfaces that come into contact with material to inhibit corrosion and act as a release agent to ease removal of subsequent material buildup.

10. Restart the pump and grease the remixer, the pan mixer, and the material pump seals. This should be done while the paddles and swing tube is in operation to work out any grout that has passed by the seals during operation.

INTERLOCK SAFETY SYSTEM

The purpose of the Interlock System is to prevent operation of the swing tube if the hopper grate is opened.

The interlock is achieved with a two position, normally open limit switch that is activated by a roller plunger. In the normal running position this switch is held in the closed position by the Locking Pin. When the grate is closed and the pin is pushed in and locked, normal pump operation can take place. Pulling out the pin in order to open the hopper grate will open the limit switch and shut down pump operations. After closing the grate and pushing in the pin, the accumulator will recharge and the pump will be ready for production in a few seconds.

Before adding material to the hopper, turn on the pump and verify that the limit switch is operating properly. **DO NOT** operate the pump if this switch is not functional. It should be repaired or replaced immediately. **DO NOT** attempt repairs with the electric motor running.

WARNING – the rotating components in the hopper can cause severe bodily injury. Do not operate this equipment without the safety interlock system operational.

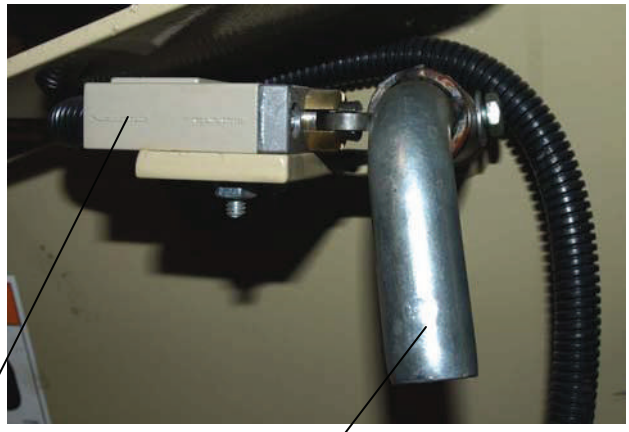

ITEM	QUANTITY	PART NUMBER	DESCRIPTION
1	1	14311	LIMIT SWITCH
1	1	03318	LOCKING PIN

MAINTENANCE INTERVALS

	Daily	Weekly	Monthly	6 Months	Yearly
OPERATION					
Diesel Engine - See Engine Manual	X				
Fuel Tank Level	X				
Hydraulic Reservior Level	X				
Hydraulic Leaks	X				
Tires	X				
Brake Lining		X			
Controls & Gauges	X				
Battery			X		
Hydrulic Cylinder Seals			X		
Wear Parts**					
Clean up	X				
Operational Safety	X				
LUBRICATION					
Diesel Engine - See Engine Manual	X				
Engine Oil Filter Change*					
Engine Oil Level	X				
Electric Motor Bearings				X	
Wheel Bearings				X	
Material Pump Main Shaft	X				
Material Pump Outlet	X				
Mixer/Re-mixer Seal Housings	X				
Mixer/Re-mixer Bearings			X		
Hydraulic Oil Filter*					
Hydraulic Oil Drain, Clean Tank					X
Lubrication Washbox	X				
Mixer Pivot Bearings			X		
Mixer Gear Box Oil			X		

*-First 50 hours of operation . Every 200 hours thereafter

**-Interval dependant on use and severity of material pumped.

MATERIAL PUMP

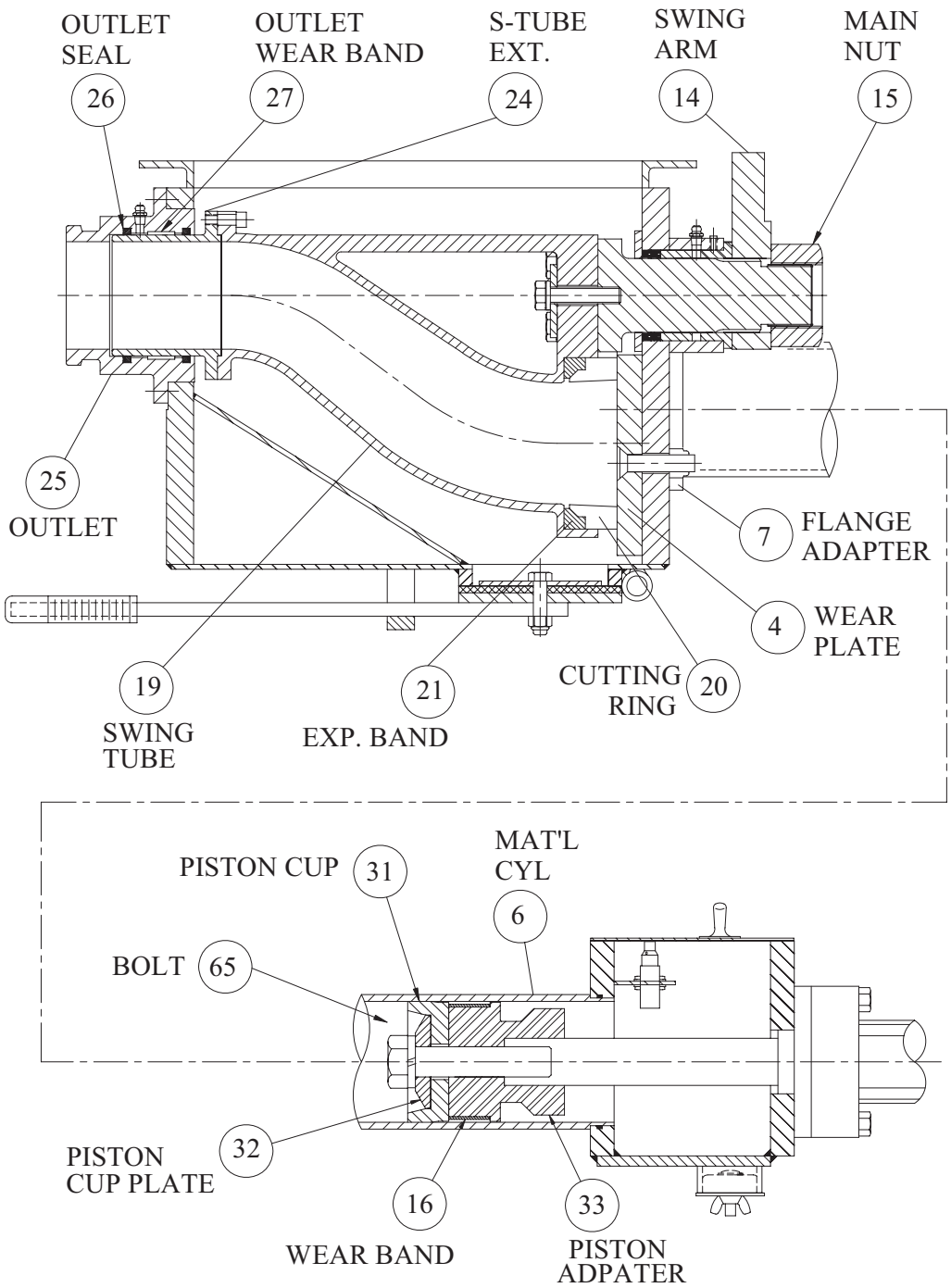

WEAR PARTS – REPLACEMENT AND ADJUSTMENT

1. **Swing Tube Adjustment –** The initial adjustment of the Swing Tube, Item 19, is made with the 2-1/4" Nut, Item 15, on the shaft. The locking bolt and retainer plate mounted to the Swing Arm, Item14, must be removed when adjustments are made. After the initial adjustment, the cutting ring, Item 20, in the swing-tube will automatically adjust for wear. The cutting ring has a rubber expansion band, Item 21, between the body of the swing tube and the diameter of the cutting ring. For proper sealing and operation this rubber must be compressed the correct amount. The correct adjustment is made by tightening the 2-1/4" nut on the shaft, rotating the nut one flat at a time. When the cutting ring contacts the wear plate continue adjustment by 1 or 2 flats of the nut. Install the retainer plate and locking bolt to lock the nut adjustment in place. There should be a minimum of 0.015" gap between the swing tube extension, Item 24, and the Outlet Body, Item 25. NOTE: Additional adjustment will be required when failure of the cutting ring to seal on the wear plate, Item 4 is observed. Attempts to reduce leakage by excessive torque on the nut will accelerate wear of these parts with negligible reduction in leakage.

NOTE: (2) Outlet seals, Item 26, and Wear Band, Item 27, must be in place when the adjustments are made**.**

2. **Outlet Seals, Item 26, and Wear Band, Item 27 –** Always replace the outlet seals and wear band whenever wear parts are replaced. Replace the seals and wear band by removal of the outlet body. Remove the (6) mounting bolts and install two bolts in the threaded jacking bolt holes located at 12 and 6 o'clock on the outlet flange to back it out of the hopper. Clean the outlet body, swing tube extension, and the hopper piloted area thoroughly before reassembling. Wipe grease on the swing-tube extension and inside the outlet body prior to assembly. The hopper pilot should be coated with a lubricant or anti-seize compound before assembly.

3. **Wear Plate, Item 4 and Cutting Ring, Item 20 –** The abrasives in pumping materials and friction of the cutting ring sliding across the wear plate result in constant wear of these parts. The loss of pumping pressure should result in a thorough inspection of these parts. Replace the wear plate and cutting ring whenever deep grooves of wear develop causing loss of sealing between the two surfaces. The inability to maintain a seal will allow the fines of the mix to be discharged back into the hopper, resulting in lost pumping pressure. The mounting surface must be clean and flat to assure proper performance of the new wear parts.

4. **Material Cylinders, Item 6 –** The material delivery cylinders have a hard-chrome internal finish for excellent abrasion resistance and provide a smooth sealing surface for the piston cups. Inspect the internal chromed surfaces for wear. A worn cylinder will exhibit feathering of the bright chrome into a dull gray surface. The loss of the chromed surface will reduce the sealing characteristics and accelerate the wear of the piston cups. Exercise care when cleaning the material cylinder ends before installing a new wear plate. Do not trap hardened grout between the two surfaces. Accidental chipping or cracking of the chromed surface will result in premature failure. Replace the o-ring seals in both the valve body and wash-box every time the cylinders are removed or replaced.

5. **Replace Piston Cups, Item 31, and Wear Band, Item 16 –** Due to the abrasiveness of materials pumped, it will be necessary to periodically replace the piston cup and the piston wear band. Symptoms of worn piston cups are: excessive accumulation of cement past into the wash box, lubricating fluid leaking from the wash box into the hopper, overnight or loss of wash box lubricant when pumping. Replace the piston cups through the hopper as follows:

a. Drain and clean the wash box.

b. Piston cup removal can be done at the top of the valve body. The hopper can be unlatched and tipped to the side.

c. Start the power unit. On the operator panel, put the Forward/Reverse switch in Reverse and toggle the On/Off/Remote switch between on and off to activate the accumulator circuit.

d. With the motor running and flow control at low volume (1-1/2 to 2 turns open), switch the pump to start and hold the pressure test switch on until the piston is fully extended to the hopper and stops. Turn the pump switch to stop. Check to see that the piston head that is forward is not covered by the swing-tube.

e. If the swing tube is in front of the forward piston head, turn the Start/Stop/Remote switch on momentarily and move the Forward/Reverse switch to the opposite position to reposition the swing tube.

f. Stop the electric motor. Lock out and tag the electric motor controls.

g. The accumulator dump valve will automatically discharge the accumulator pressure; the gauge must read zero.

Never work in the hopper when the pump power source is operating or the accumulator circuit is pressurized. Severe injury can result from inadvertent actuation of moving parts. For your protection, take time to stop and disable the motor power system and confirm the accumulator pressure gauge reads zero before putting hands in the hopper.

h. The piston bolt, Item 65, and the piston cup plate, Item 32, should be able to be seen and felt in the material cylinder. Chip away any material on and around the bold head.

i. Using an air impact gun, remove the 3/4-16 bolt with a 1-1/8” socket.

j. Start the motor and turn the pump switch to start for 2-3 seconds. This will retract the cylinder rod and piston adapter from the piston cup.

k. Turn the Start/Stop switch to stop and disable the power source.

l. Using a punch or blunt object, tap the bottom of the piston cup, Item 31, until it turns side-ways in the material cylinder. It can now be easily removed.

m. Remove the steel piston adapter, Item 33, and clean thoroughly.

n. Start the motor and turn the pump switch to start. Toggle the manual pumping switch to bring the ram forward in the material cylinder where the piston cup was just removed.

o. To install the new piston cup, first place the piston adapter with the piston wear band on the hydraulic cylinder rod. Grease the piston cup and tap it into the material cylinder. Place the piston cup plate and lock washer on the 3/4-16 bolt. After coating the bolt threads with a generous amount of anti-seize compound, install bolt and piston cup plate into hydraulic cylinder rod.

p. Repeat all the above steps to change the opposite piston cup.

q. Always inspect all parts for wear and damage whenever working on the pump. Early detection of problems will save time and money.

r. When both piston cups have been replaced, fill the wash box with lubricant.

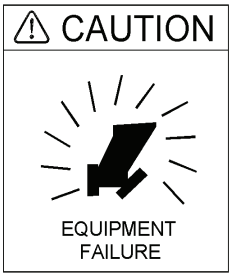

Never cycle the pump without lubricant in the wash box and water or pumpable material in the hopper. This will cause damage to the piston cups. If it is necessary to stroke the pump dry, always do it very slowly. Excessive friction will cause heat and damage the piston cups.

6. **Material Cylinders, Item 6** – The material delivery cylinders have a hard chrome internal finish for excellent abrasion resistance and provide a smooth sealing surface for the piston cups. Inspect the internal chromed surface for wear. A worn cylinder will exhibit feathering of the bright into a dull gray steel surface. The loss of the chromed surface will reduce the sealing characteristics and accelerate the wear of the piston cups. Exercise care when cleaning the material cylinder ends before installing a new wear plate. Do not trap hardened grout between the two surfaces. Accidental chipping or cracking of the chromed surface will result in premature failure.

PROXIMITY SENSOR ADJUSTMENT

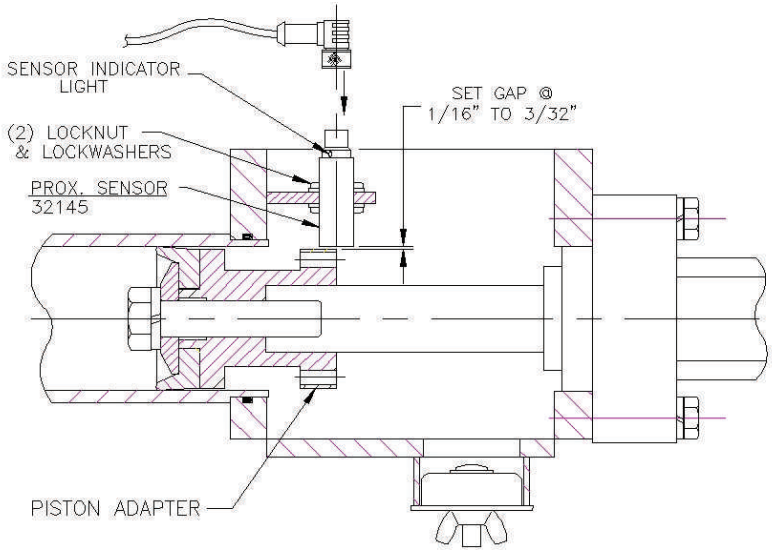

The Powercreter material pump is delivered with factory set proximity sensors. However, after maintenance or replacement of components, re-adjustment may be required. The proximity sensor adjustment should be made in the Forward pumping condition.

To adjust the sensors:

1. With both sensors assembled as shown in the pictures above, adjust the body of the sensor to ensure the maximum gap is between the sensor and piston adapter.
2. From the operators control panel, start the power pump. With the pump in the Forward mode, switch to Pressure Test to retract one material cylinder piston to end of travel. Shut down engine or motor, but retain power to the control circuit.
3. Adjust the gap between the sensor and the piston adapter. The set dimension should be between 1/16” (0.062”) and 3/32” (0.093”).
4. Repeat step 2, except after switching to Pressure Test toggle the manual pumping switch to retract the other material cylinder piston. Repeat step 3.
5. Restart the motor and start the pump to confirm the pump cycles automatically with the new sensor adjustments.

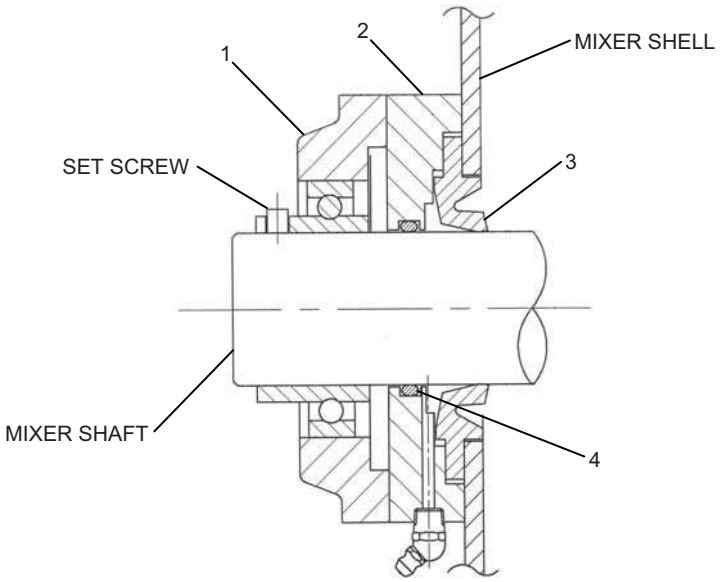

RE-MIXER SEAL REPLACEMENT

The inner seal of the seal housing is exposed to severe operating conditions and eventually will require replacement. The function of the grease filled seal housing is to prevent solid particles from entering the flanged ball bearings. The seals need to be replaced when they can no longer retain grease in the Seal Housing, thus permitting eventual premature bearing failure.

IT IS RECOMMENDED TO GREASE THE SEAL HOUSINGS AFTER EVERY DAYS USE. THIS WILL HELP FORCE ANY FOREIGN MATTER OUT OF THE HOUSING WHICH MAY HAVE WORKED PAST THE SEAL.

TO REPLACE THE SEALS IN THE HOUSING:

1. Remove the chain sprocket (See page 4-5).
2. Securely prop the mixer shaft inside the mixer to keep the shaft axially centered. This is done to prevent seal damage during re-installation.
3. Remove the Flanged Ball Bearing (Item 1), and Seal Housing (Item 2).
4. Remove the Seal (Item 3) and O-ring (Item 4).
5. Clean the Seal housing and Mixer Shaft end of material build up.
6. Inspect Flanged Bearing for operation and clean or replace if required.
7. Grease the end of shaft and insert New Seal (Item 3).
8. Install new O-ring (Item 4) in Seal Housing, then insert Housing onto shaft.
9. Install Flanged Bearing.
10. Lock shaft in position with set screws in the inner race of the Flanged Bearing.
11. Fill the Seal Housing with grease until grease comes out of the seal.

RECOMMENDED LUBRICANTS

LUBRICATION / WASH BOX

Fill the Lubrication/Wash Box to the top of the cylinder rods. There are three recommended lubricants:

1. Water is commonly used. Using only water will give the shortest life of piston cup wear.
2. Soluble oil and water mix will improve the life of the piston cups.
3. Oil only, as compared with water only, will almost double the life of the piston cups. Oil greatly reduces the drag friction between the material cylinder and pistons. This can be used oil, drain oil, vegetable oil, or any type of inexpensive oil. Oil is recommended in freezing weather conditions.

HYDRAULIC TANK

Fill the hydraulic tank to the mid-point of the tank level indicator. Use clean SAE 5W-20 Hydraulic Oil which is formulated for operation over a wide temperature range. This oil contains anti-wear and anti-foam additives and contains rust and oxidation inhibitors for internal protection. Use the following typical test data if selecting an equivalent.

Viscosity	
cSt @ 40º C	23-27
cSt @ 100º C	5.4
Viscosity index	155
API g Gravity @ 60º F	31.2
Flash point	370º F
Pour Point	-45º F

Low Temp. Pumpability test	Pass
Foam Test	Pass
Rust Test	Pass
Total Acid No	0.6
Zinc, % by weight	0.06-0.07
ISO Viscosity Grade	370 F
SAE Grade	5W-20

GREASE FITTINGS

Use Multi-Purpose E.P. No. 2 grease, except with electric motors

MIXER AND REMIXER LUBRICATION

Pillow block bearings, flange bearings, and the seal housings should be maintained full of grease and lubricated daily. Factory lubricant is NLGI Grade 2 lithium 12 – hydroxystearate base grease.

LUBRICATION - ELECTRIC MOTOR

Motors with grease fittings should be lubricated every 6 months. Add 1.0 cubic inches of lubricant to 20 and 30 HP motors. Add 1.5 cu.in. of lubricant to 40 HP and above motors. Use the following recommended lubricants:

Shell Oil Company - Dollum R
Chevron Oil - SRI No.2
Texaco Inc. – Premium RB

Lubrication Procedure:

1. Clean the area around the grease fitting and remove the protective cap.
2. With the motor warm and stationary, add the recommended volume as listed above, and run the motor for 20 minutes.

Note: All used petroleum based lubricants should be recycled in accordance with environmentally safe methods.

TROUBLESHOOTING

Electric motor will not start …….	• Confirm power wiring, see “Set Up of Equipment” • Check the motor starter box for blown fuses. • Confirm E-Stop is reset by pulling knob outward.
Material pump does not cycle …….	• Flow control must be open. • The accumulator system did not charge on start-up. • Confirm Pumping / Pressure Test switch on the operator control panel is in the “Pumping” position. • Confirm Pump Start / Pump Stop switch on the operators control panel is in the “Pump Start” position. • Proximity sensors or sensor cables - adjust or replace. See “Sensor Switch Adjustment”. • Switching or continuity fault with Pump Start/Pump Stop or Pressure Test switches. • Directional control valve requires cycling voltage to the solenoid coil and continuity in the coil winding. • Confirm the main hydraulic pumps will maintain pressure. • Confirm the pumping circuit relief valve and the swing tube relief valve is set in accordance with specifications on the unit’s data tag.
Pump makes one stroke, but will not cycle ……..	• If pump will cycle with manual pumping switch, adjust the sensors. See “Sensor Switch Adjustment” • If pump will not cycle with manual pumping switch, refer to “Material Pump Does Not Cycle” in this troubleshooting guide.
Stroke is short …….	• Sensors require adjustment. See “Sensor Switch Adjustment” • Pumping cylinder seals worn and require replacing. • The check valves must seal in the checked flow direction for the stroke adjustment circuit to maintain full stroke. Clean or replace.

TROUBLESHOOTING

Both material pump cylinders stroke forward under pressure test ……	• Faulty check valve. Clean or replace.
Swing Tube does not swing …….	• Confirm Pump Start/Pump Stop switch on operator control panel is in Pump Start position. • Confirm relief valve is set as specified on the data tag. • Confirm voltage, circuit and coil continuity, and the spool is shuttling on the Swing Tube directional control valve. • Confirm the dump valve located in the swing tube manifold is working properly. • Confirm the accumulator nitrogen pre-charge is set per the pressure setting listed on the data tag. • Swing tube circuit pump is worn and needs replacement. • Mechanical bind. Check freedom of rotation of the main shaft and outlet to s-tube extension. Also check torque of the 2-1/4" main nut. • Confirm that there are no foreign objects or hardened material in the hopper obstructing travel of the swing tube.
Accumulator pressure builds slow …….	• Swing tube circuit pump worn and needs replacing • Accumulator bladder leaks and needs replacing.
Swing tube out of timing ……..	• Confirm accumulator is pre-charged per data tag. • Swing tube cylinder seals leak and need replacing.

TROUBLESHOOTING

Swing Tube slow shifting ……	• Confirm accumulator circuit relief valve is set per data tag. • Swing tube cylinder seals leak and need replacing.
Material Cylinders stroke but do not build pressure ……	• Worn wear plate, cutting ring, and/or piston cups. See "Wear Parts Replacement or Adjustment". • Confirm that the relief valve is set per the pressure specified on the data tag. • Swing tube out of timing. Confirm accumulator precharge and swing tube cylinder seals for wear. • Pumping cylinders seals are worn and need replacing. • Main hydraulic pump is worn. Replace pump if the case drain line is producing excessive oil. Consult factory prior to replacement to confirm condition of the pump.
Fluctuating pumping pressure …….	• Worn wear plate, cutting ring, and/or piston cups. See "Wear Parts Replacement or Adjustment". • Pumping cylinders seals are worn and need replacing.
Slurry in the Lubrication/Wash Box ……..	• The piston cups and/or the material cylinders are worn and need to be replaced. See "Piston Cups".
Adjustment of flow control valve does not change material pump speed …….	• Confirm the relief valve is set per the pressure specified on the data tag. • Main hydraulic pump is worn. Replace pump if the case drain line is producing excessive oil. Consult factory prior to replacement to confirm condition of the pump.